INSTALLATION GUIDE

SYSTEMS evolve



global

TABLE OF CONTENTS

List of Tools P.03

Panels P.04

Corner Connections – Equal Height 4
Corner Connections – Variable Height 5
Corner Connections – Corner Post Extension 6
Inline Connection – Equal Height 6
Inline Connection – Variable Height 7
Notched Top Cap 7
Inline Connection – Panel Extension Module 8
End-of-Run Post Kit 9
End-of-Run Post Kit - Wall Mount Application 10
End-of-Run Post Kit - Off Module Application 10
Felt Dividers 11
Privacy Glass 12
Privacy Ceiling 19
Door Panel 20
Privacy Screen 22
Reverse Sliding Door 22
Sliding Panel Door Lock 23
Evolve Panel Removal 24
Evolve Module Removal 25
Mobile/Freestanding Monolithic Privacy Panels 26

Electrical P.28

Wiring Schematic 28
Power Distribution Housing 28
Jumper Cables and Pass-Through Cables 29
Reversible Floor Power Entry 30
Ceiling Power Entry 31
Duplex Receptacle 32
Cable Capacity 33

Worksurfaces P.34

End Panel 34
Corner Bracket 34
Cantilever 35
Support Leg 35
Worksurface Supporting Pedestals 36
Laminate End panels 37
Optional Accessory Rail 37

Storage P.38

Overhead Flipper Door Storage Unit 38
Corner Shelf 39
Low-Profile Shelf 40
Top Mount Overhead 41
Panel Mounted Overhead Storage Unit - ADA Compliant 43
Up-Mount Overhead Storage Unit - ADA Compliant 43
Up-Mount Conversion Kit 44
Fine Tuning of Up-Mount Overhead Storage Unit 45
Laminate Overhead Storage 46
Off Module Worksurface Bracket 53
Lock Clip Installation 54
Pass Thru Sliding Door 55
Name Plate 56
Accessory Retainer 57

Acoustic Grid P.58

Please contact your Evolve Service Representative at 856.552.4000 for any questions or concerns.

NOTE: Any alterations to listed components will void the manufacturer's warranty. The manufacturer will not be responsible for any damage or bodily harm caused by alterations in accordance with national or local electrical codes and manufacturer's specifications. In accordance with the manufacturer's policy of continual product improvement, the product presented in this document is subject to change without notice or obligation.24

INSTALLATION GUIDELINES

Evolve

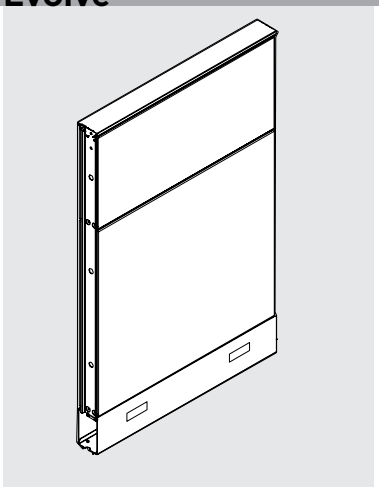

Required Tools
Safety Glasses
Rubber Mallet
Metal Pick*
Fabric Spline Roller*
Power Prill (var speed, rev)
Magnetic drill bit holders
1/4" Nut-Driver
5/16" Nut-Driver
3/8" Nut-Driver
#2 Robertson Screwdriver
#3 Robertson Screwdriver
Large 1/4" Blade Screwdriver
3/16" Diamiter Punch
Utility Knife
48" Long Level
Tape Measure
Gloves

Additional items you may find useful:
#2 Phillips Screwdriver
#3 Phillips Screwdriver
1/2" Wrench
9/16" Wrench
Adjustable 8" Wrench
Needlenose Pliers
Large Channel Lock Pliers
Fine tooth Saw (Hacksaw)
General Purpose Prybar

Screws Used During Installation
1/2" Pan Head Screw
1/2" Pan Head Tapping Screw

* These Items are available through customer service at 856.552.4000.

Installation Sequence

Panels
Corner Connections – Equal Height (EVPCPA2, EVPCPA3, EVPCPA4)
Corner Connections – Variable Height (EVPVPA2, EVPVPA3, EVPVPA4)
Corner Connections – Corner Post Extension (EVPCEPA2, EVPCEPA3, EVPCEPA4)
Inline Connection – Equal Height (EVPIC)
Inline Connection – Variable Height (EVPVC)
Notched Top Cap (EVPTNTA, EVPTDNTA)
Inline Connection – Panel Extension Module (EVPIEC)
End-of-Run Post Kit (EVPERA)
End-of-Run Post Kit – Wall Mount Application

Electrical
Wiring Schematic
Power Distribution Housing (EVE8PD)
Jumper Cables and Pass-Through Cables (EVE8CP)
Reversible Floor Power Entry (EVE8FR1, EVE8FR2)
Ceiling Power Entry (EVE8EC1, EVE8EC2)
Duplex Receptacle (EVE8RD)

Worksurfaces
End Panel (EVHEP)
Corner Bracket (EVHCB)
Cantilever (EVHC)
Support Leg (EVHS)
Worksurface Supporting Pedestals (EVS12BBF, EVS12FF)

Storage
Overhead Flipper Door Storage Unit (EVSOF)
Corner Shelf (EVSSC)
Low-Profile Shelf (EVSSL)
Panel Mounted Overhead Storage Unit - ADA Compliant (EVADA-PM)
Up-Mount Overhead Storage Unit - ADA Compliant (EVADA-UM)
Up-Mount Cantilever Kit (EVADA-KIT)
Fine Tuning of Up-Mount Overhead Storage Unit
e-STOR - Two Lateral Cabinet Assembly Instructions
e-STOR - Two Lateral Cabinet and Panel Assembly Instructions
Storage Cabinets with Pass Through Cables

INSTALLATION GUIDELINES

Corner Connections - Equal Height

Parts List

1 Aluminum corner post
1, 2, 3 or 4 slotted posts with leveling glide (attached to aluminum corner post)
1, 2, 3 or 4 single clamps
Appropriate trim, 1 Top cap

Corner Posts are used to connect panels of equal height at a corner.

45º and 60º posts are installed in the same manner.

Always start the installation of panels at a corner.

STEP 1: Partially attach a slotted post to one end of the panel to be installed. Do this by engaging the down-hook at the bottom of the panel (above the raceway channel) over the up-hook on the slotted post.

STEP 2: Attach the opposite end of this panel to one face of the Corner Post by engaging the down-hook at the bottom of the panel (above the raceway channel) over the up-hook on the slotted post. (The slotted post is secured to the face of the Corner Post.)

STEP 3: Connect the top of the Corner Post to the panel by engaging the single clamp through the slotted post and into the panel liner. Secure the single clamp by bolting it to the top of the panel using two (2) quarter 20 1/2" flat head screws.

STEP 4: Repeat the above procedure to attach the second, third and fourth panel to the Corner Post.

STEP 5: Add spacer clips.

STEP 6: Press fit the top cap down onto the top of the Corner Post.

STEP 7: Reattach the panel tops caps.

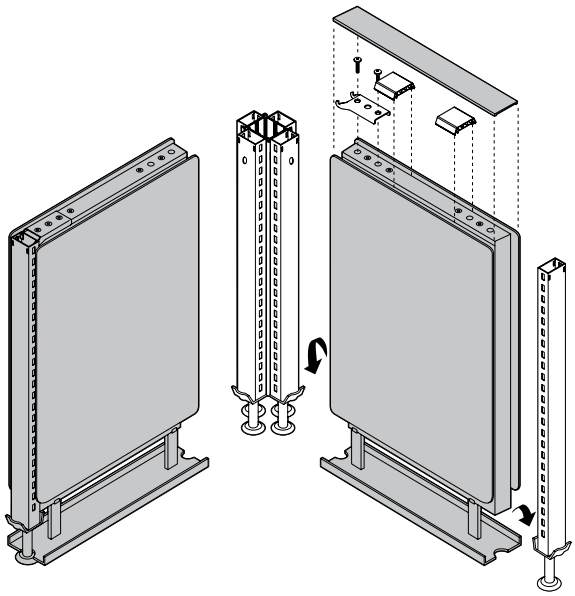

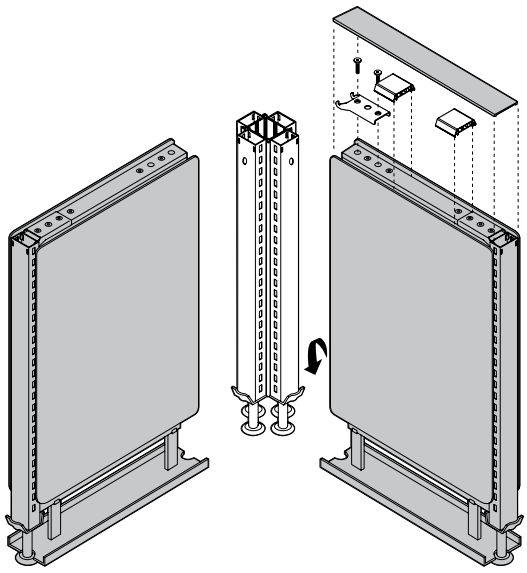

Corner Connections - Variable Height Two-Way, Three-Way and Four-Way, Corner Posts

Parts List

1 Aluminum corner post
1, 2, 3 or 4 slotted posts of varying heights with levelling glide (attached to aluminum corner post)
1, 2, 3 or 4 single clamps
Appropriate trim, 1 Top cap

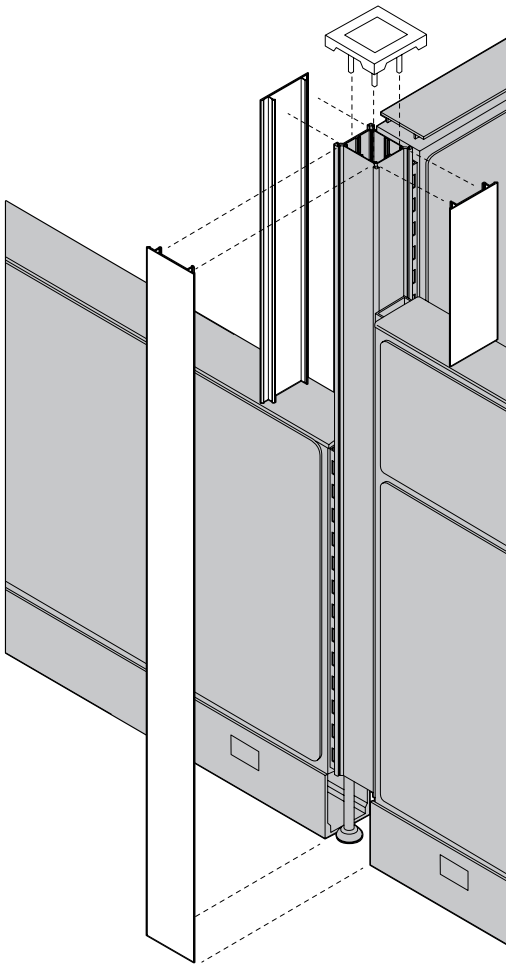

Variable-Height Corner Posts are used to connect panels of different heights at a corner.

Always start the installation of panels at a corner.

STEP 1: Partially attach a slotted post to one end of the panel to be installed. Do this by engaging the down-hook at the bottom of the panel (above the raceway channel) over the up-hook on the slotted post.

STEP 2: Attach the opposite end of this panel to the corresponding face of the Variable-Height Corner Post by engaging the down-hook at the bottom of the panel (above the raceway channel) over the up-hook on the slotted post. (The slotted post is secured to the face of the Variable-Height Corner Post.)

STEP 3: Connect the top of the Variable-Height Corner Post to the panel by engaging the single clamp through the slotted post and into the panel liner. Secure the single clamp by bolting it to the top of the panel using two (2) 1/2" flat head screws.

STEP 4: Repeat the above procedure to attach the second, third and fourth panel to the Variable-Height Corner Post.

STEP 5: Snap the vertical corner trim pieces onto the corner post. Start at the top and align corner trim with panel top cap.

STEP 6: Press fit the top cap down onto the top of the Variable-Height Corner Post.

STEP 7: Reattach the panel top caps.

INSTALLATION GUIDELINES

Corner Connections - Corner Post Extension Two-Way, Three-Way and Four-Way

Parts List

1 Aluminum corner extension post
1, 2, 3 or 4 non-slotted posts (attach to aluminum corner post)
1, 2, 3 or 4 variable-height clamps
Appropriate trim

Corner Post Extensions are used to connect Panel Extension Modules at a corner. The combination of one 66" panel and three 12" Panel Extension Modules has been tested and U.L. Approved. Special care should be taken to ensure stability when exceeding 90" in height.

STEP 1: Remove the post top cap.

STEP 2: Remove the single clamp that attaches the panel to the corner post.

STEP 3: Reconnect the top of the panels to the slotted corner posts by engaging the variable-height clamps through the slotted post. Rotate the variable-height clamps down onto the top horizontal tubes of the panels. Secure the variable-height clamps by bolting each to a panel using two 1/2" flat head screws.

STEP 4: Insert the Corner Post Extension into the existing Corner Post, making sure that it is fully seated.

STEP 5: Position the Panel Extension Module on top of the desired, corresponding panel and against the Corner Post Extension.

STEP 6: Connect the top of the Corner Post Extension to the Panel Extension Module by engaging the single clamp through the slotted post and into the panel liner. Secure the single clamp by bolting it to the top of the panel using two 1/2" flat head screws.

STEP 7: Repeat the above procedure to attach the second, third and fourth panel to the Corner Post Extension.

STEP 8: Attach the Corner Post top cap.

STEP 9: Reattach the panel top caps.

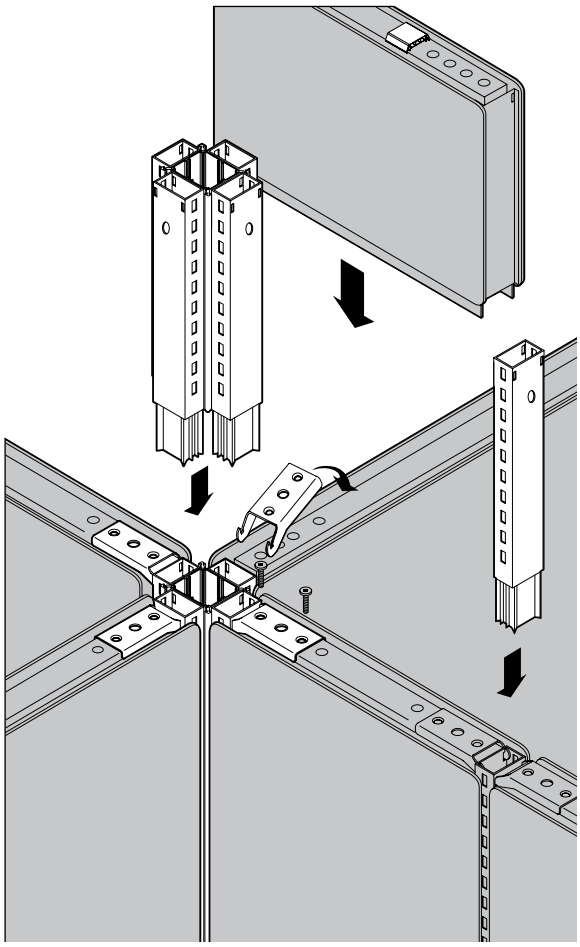

Inline Connections - Equal Height

Parts List

1 Slotted post with levelling glide
1 Double clamp

The Inline Connector is used to connect two panels of equal height in a straight line.

STEP 1: Partially attach the slotted post to one end of the panel to be installed by engaging the down-hook at the bottom of the panel (above the raceway channel) over the up-hook on the slotted post.

STEP 2: Attach the opposite end of this panel to the slotted post of the run of panels. Do this by engaging the down-hook at the bottom of the panel (above the raceway channel) over the up-hook on the opposite side slotted post.

STEP 3: Connect the two panels and Inline Connector by engaging the double clamp through the slotted post and into the panel liner. Secure the double clamp by bolting it to the top of the panel using four (4) 1/2" flat head screws.

STEP 4: Reattach the panel top caps.

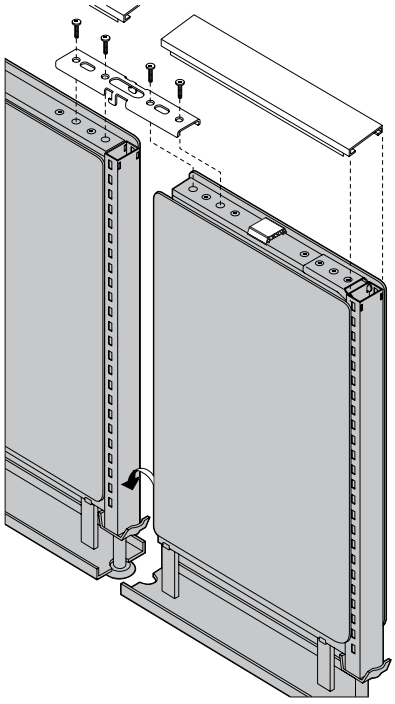

Inline Connection - Variable Height

Parts List
1 Slotted post with levelling glide
2 Variable-height clamps

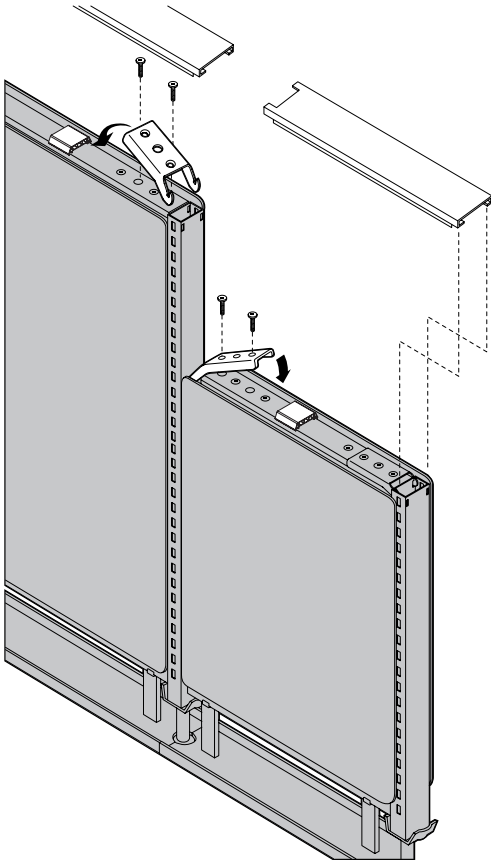

A Variable-Height Connector is used to connect two panels of differing heights in a straight run.

A Variable-Height Connector must match the height of the taller panel.

STEP 1: Partially attach a same-height slotted post to one end of the panel to be installed. Do this by engaging the down-hook at the bottom of the panel (above the raceway channel) over the up-hook on the slotted post.

STEP 2: Partially attach the slotted post to the taller panel by engaging the down-hook at the bottom of the panel (above the raceway channel) over the up-hook on the slotted post.

STEP 3: Connect the taller panel to the slotted post by engaging the single variable height clamp through the slotted post and into the panel liner. Secure the single clamp by bolting it to the panel using two (2) 1/2" flat head screws.

STEP 4: Partially attach the lower panel by engaging the down-hook at the bottom of the panel (above the raceway channel) over the up-hook on the opposite side slotted post.

STEP 5: Connect the top of the lower panel to the slotted post by engag- ing the variable-height clamp through the slotted post. Rotate the variable-height clamp down onto the top horizontal tube of the panel. Secure the variable-height clamp by bolting it to the top of the panel using two (2) 1/2" flat head screws.

STEP 6: Add spacer clips.

STEP 7: Reattach the panel top caps.

Notched Top Cap - For PVC Top trim Only

When two panels of different heights are joined in a run of panels, the top cap of the lower panel must be notched to allow it to go around the Inline connector that extends to the top of the taller panel.

STEP 1:

INSTALLATION GUIDELINES

Inline Connection - Panel Extension Module

Parts List

1 Non-slotted post with attached aluminum inserter
2 Variable-height clamps

An Inline Panel Extension Connector is used to attach the panel extension modules to the top of an existing run of panels. The combination of one 66" panel and three 12" Panel Extension Modules has been tested and U.L. approved. Special care should be taken to ensure stability when exceed- ing 90" in height.

STEP 1: Remove the double clamp that bridges the two panels.

STEP 2: Reconnect the top of the panels to the slotted post by engaging the variable-height clamps through either side of the slotted post. Rotate the variable-height clamps downward and bolt each to a panel using two 1/2" flat head screws.

STEP 3: Insert the Inline Extension Connector into the existing Inline Connector, making sure that it is fully seated. Option A

a) Repeat 1 through 4 along the top of the panel run where the Panel Extension Modules are required.
b) Slide the Panel Extension Modules down between the Inline Extension Connectors.
c) Connect the two panels and Inline Connector by en- gaging the double clamp through the slotted post and into the panel liner.
d) Secure the double clamp by bolting it to the Panel Extension Module using four (4) 1/2" flat head screws.
e) Add spacer clips.
f) Reattach the panel top caps.

Option B: Where the Panel Extension Modules are close to the ceiling, the installation must be accomplished progressively. e.g. post – panel – post – etc.

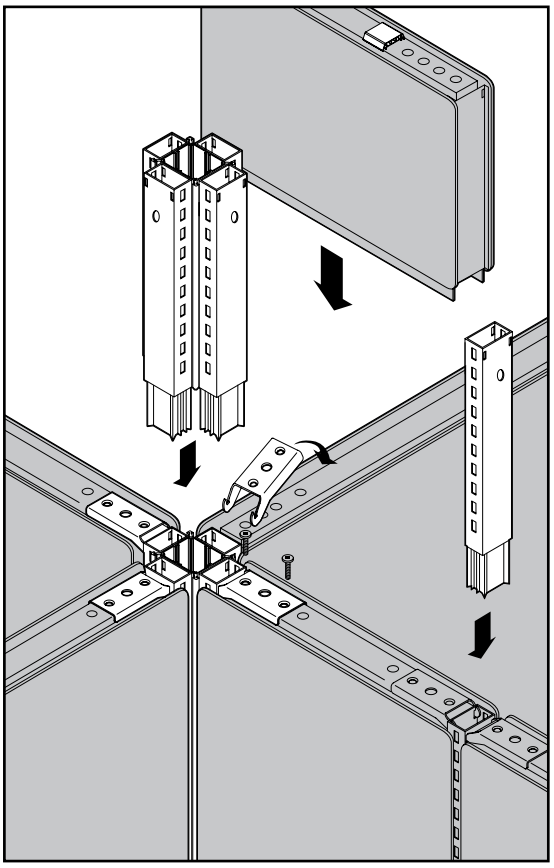

End of Run Post Kit

Parts List:
1 Slotted post with levelling glide
1 Single clamp
1 End trim kit
2 Metal Clips per each trim.

An End-of-Run Kit is used at the end of each panel run.

STEP 1: Attach the End-of-Run Trim Kit. Continue to the end of the run of panels by engaging the lance at the top of the end trim extrusion into the top cap. Press the extrusion onto the slotted post.

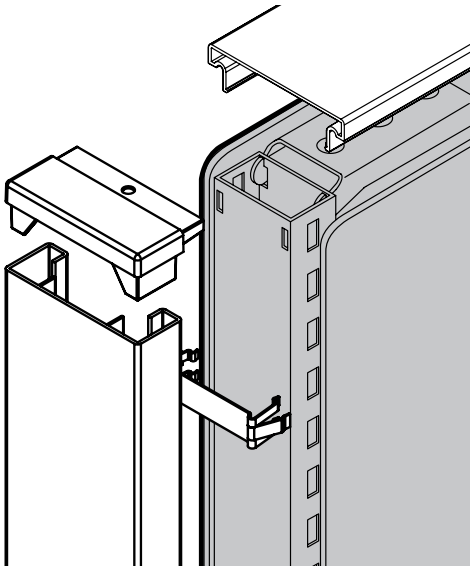

INSTALLATION GUIDELINES

End-of-Run Kit - Wall Mount Application

Parts List
1 Slotted post with levelling glide
1 Single clamp
1 End trim kit

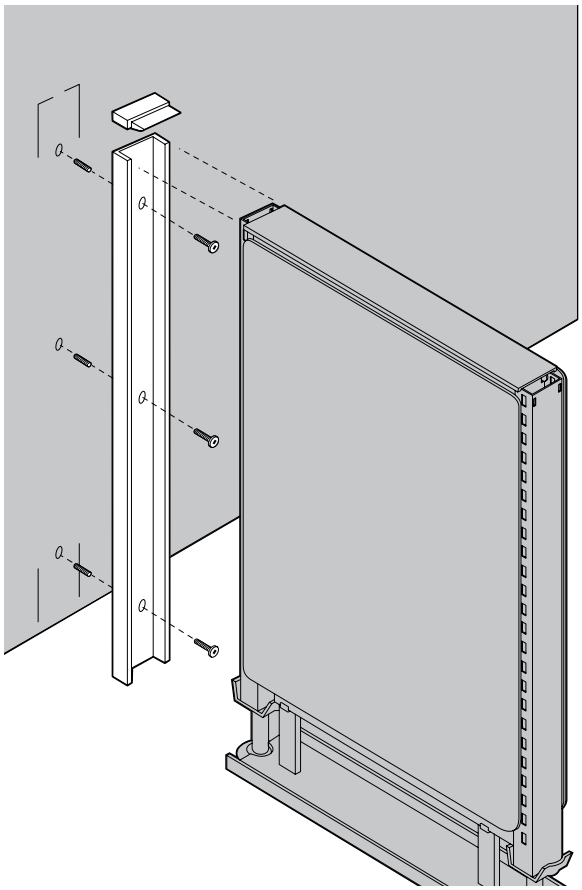

A Wall Mount is the same as an End-of-Run Post Kit. It is used to attach a panel run to a fixed wall.

STEP 1: Select the panel that starts at the fixed wall.

STEP 2: Partially attach an Inline Connector to the end of the panel furthest from the wall by engaging the down-hook at the bottom of the panel (above the raceway channel) over the up-hook on the slotted post.

STEP 3: Attach the End-of-Run Post Kit to the end of the panel that will be against the wall. (See END-OF-RUN POST KIT opposite.)

STEP 4: Level the panel (consider the height of the rest of the run of panels)

STEP 5: Locate the prepared panel at the desired position on the wall and mark the location.

STEP 6: Remove trim from the slotted post attached to the panel.

STEP 7: Drill 1/4” holes through the trim at 18” intervals.

STEP 8: Place trim on wall at marked location and mark holes.

STEP 9: Drill holes in wall

STEP 10: Attach trim to wall. (Evolve does not supply mounting hardware)

STEP 11: Reattach the panel top cap.

STEP 12: Slide the panel onto the trim Wall Mount.

End of Run Post Kit, Off Module Application

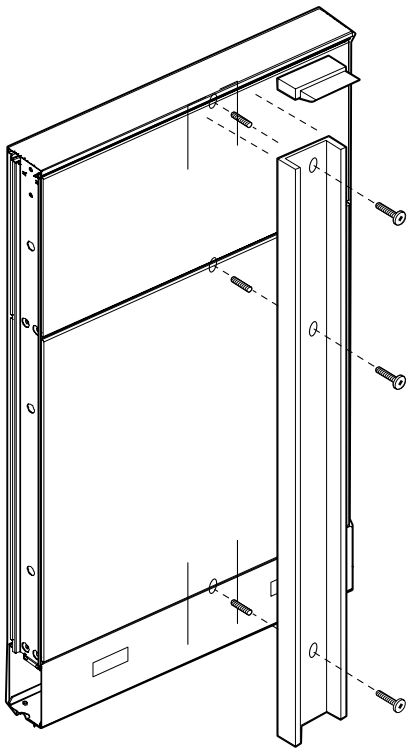

Felt Dividers

STEP 1: Place Blocks (4) into position

STEP 2: Remove strips off of tape underneath 12" Spacer Clip (3) and locate in middle of panel

STEP 3: Align felt evenly within the channel

STEP 4: Push felt down firmly and evenly into the channel.

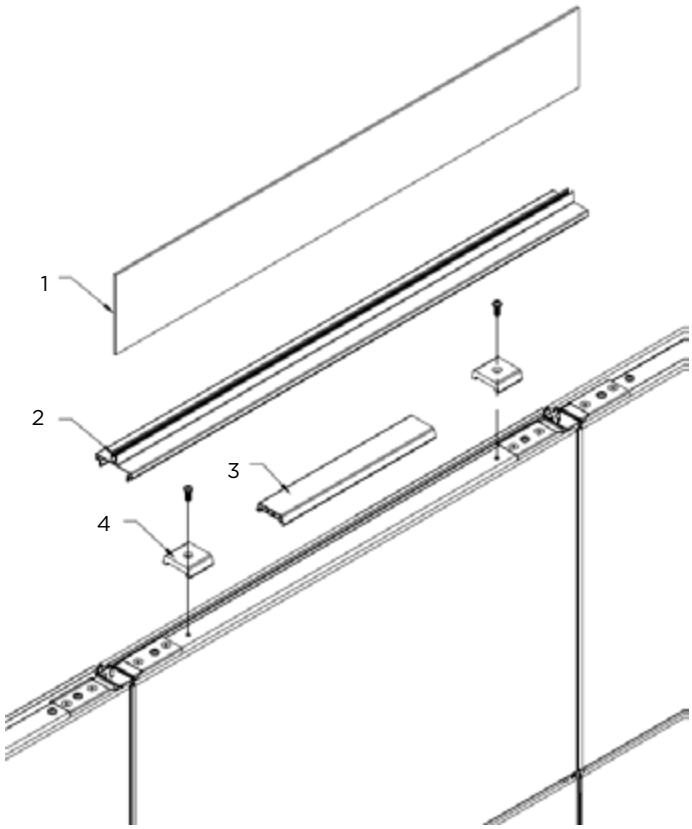

INSTALLATION GUIDELINES

Privacy Glass installation with new seals

Parts List

1 Glass
2 Aluminum Top Trim with channel
3 12” Spacer Clip
4 Block
5 Glass Seal
6 End Cap
7 Small Glass Seal in middle

A Wall Mount is the same as an End-of-Run Post Kit. It is used to attach a panel run to a fixed wall.

STEP 1: Remove strips off of tape underneath 12” Spacer Clip (#3) and locate in middle of panel.

STEP 2: Remove existing pan head screws just outside the single panel clamps, from the top horizontal rail. Place Blocks (#4) into position
over screw hole and secure using the same screw previously removed.

STEP 3: Position Top Trim (#2) so the ends of trim align with the center of the connector slots. The holes in the channel that holds the glass,
should align with the screws holding the blocks below. Snap top trim on securely.

a. Note: To remove the Top Trim, the screws in the blocks below must be loosened first. After removing the Top Trim, the blocks can be slid to the side, to remove and reuse.

STEP 4:Place the Seal (#5) over each hole, and seal (#7) in middle, in the Top Trim extrusion channel, symmetrically so the cutouts align with the top of the extrusion channel, and the same amount sticks above the extrusion on each side.

STEP 5: Align glass evenly within the channel.

STEP 6: Push Privacy Glass down firmly and evenly into the channel.

STEP 7: Using an exacto knife, cut the excess material on the Seal (#5) that is sticking up above the channel.

STEP 8: Push Cap(#6) in top tim channel at ends to close open ends, see details

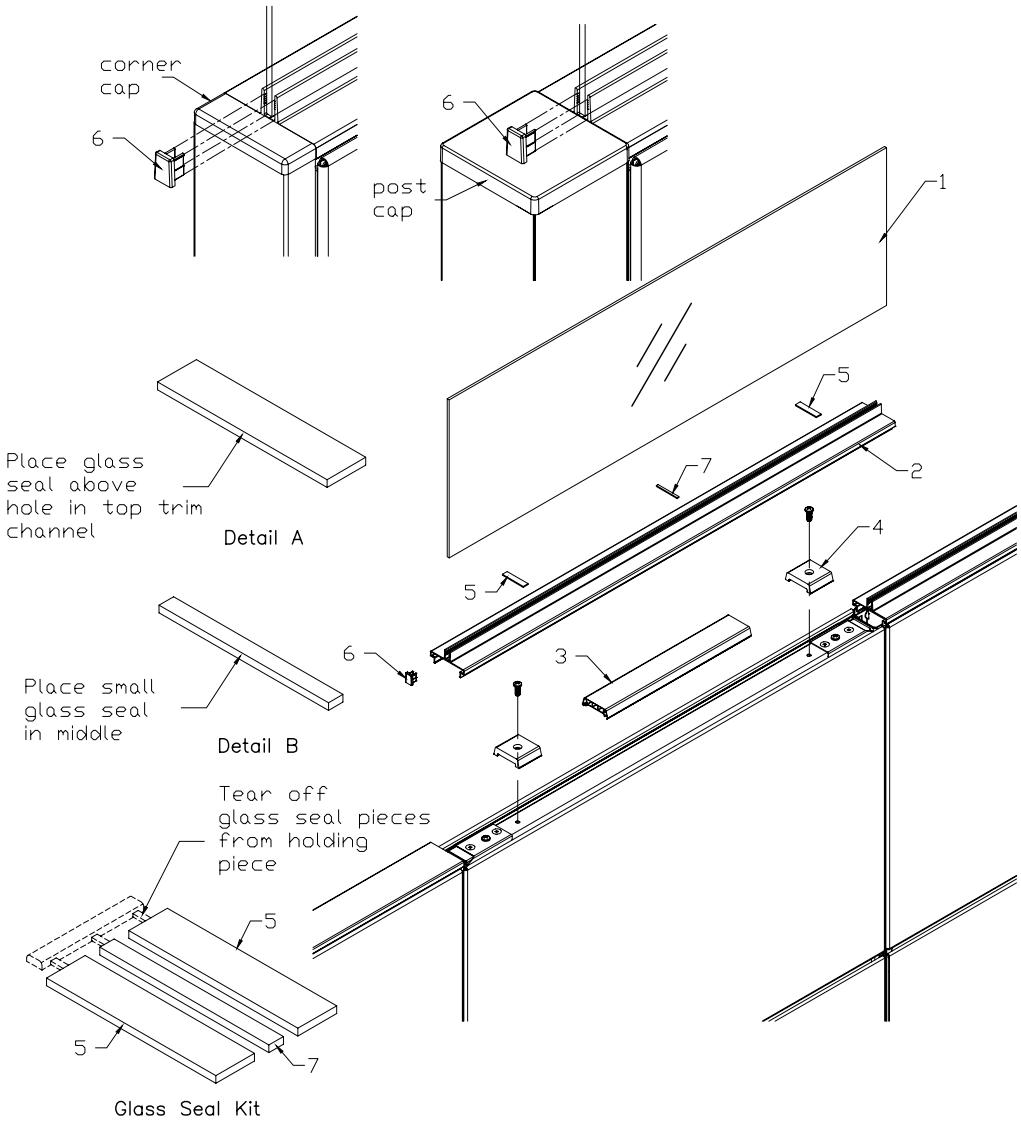

INSTALLATION GUIDELINES

Privacy Glass Installation Instructions

STEP 1: Remove screw



STEP 2: Install block and screw back using the same screw. It is important to start the installation from the middle panel.



STEP 3: Blocks installed



STEP 4: Peel off double sided tape



Privacy Glass Installation Instructions

STEP 5: Install PVC spacer in the middle



STEP 6: Locate top trim and adjust sideways to the middle of the slot



STEP 7: Snap on block



STEP 8: Install next top trim while ensuring that both trims are fully aligned



INSTALLATION GUIDELINES

Privacy Glass Installation Instructions

STEP 9: Plastic seal with grooves on the top side. For ease of installation, use 1/2” plastic seal.

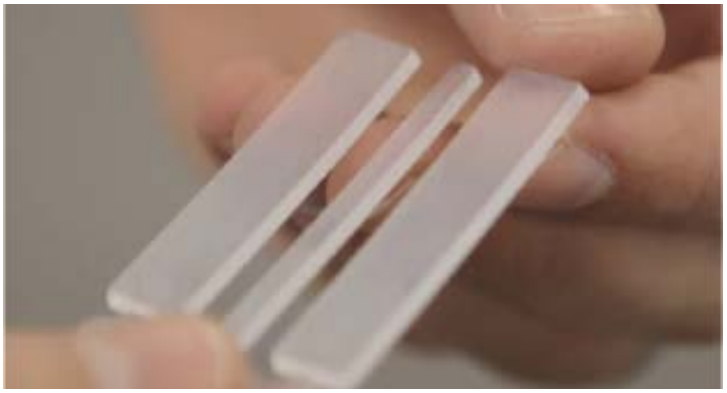

STEP 10: Plast plastic seal on the head of the block screw with grooves facing down. Adjust the plastic seal symmetrically on the top of the trim on both sides.

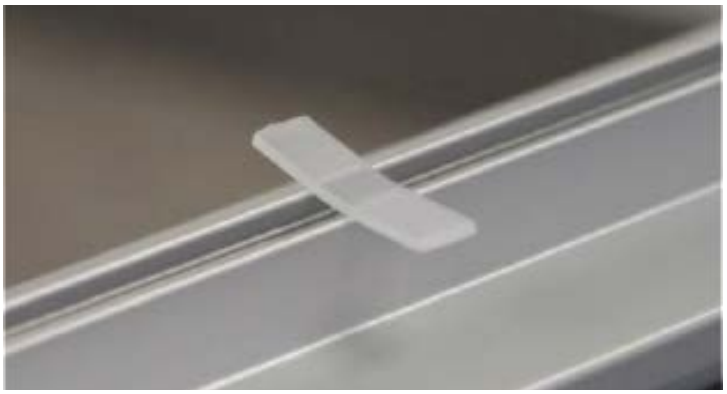

STEP 11: Place thin seal in middle of trim

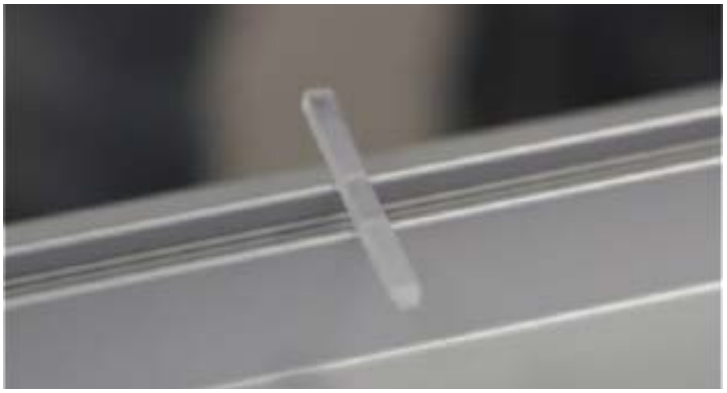

Privacy Glass Installation Instructions

STEP 12: Hold privacy glass from both ends (2 people) and install privacy glass ensuring that the glass seal is fully aligned.



STEP 13: If glass seal slides off place, pull glass up and re-install as indicated in the previous step.

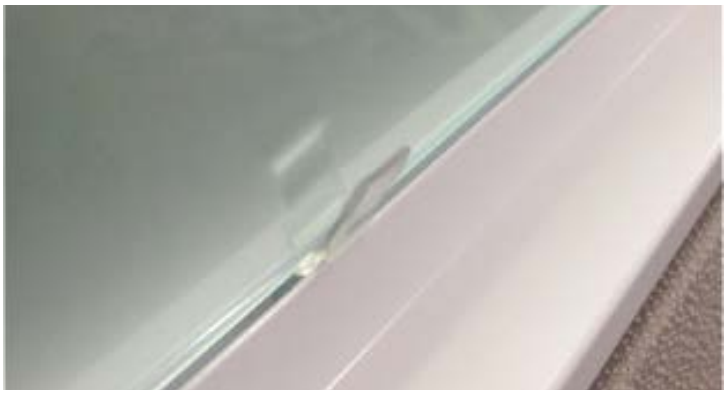

STEP 14: Logo should always be consistently on the same bottom corner. Ensure consistency with having the shiny sides of the privacy glass on the same side.



INSTALLATION GUIDELINES

Privacy Glass Installation Instructions

STEP 15: Ensure that the 2 adjacent privacy glass pieces are aligned and a tight gap is left between the 2 edges (3/32")





STEP 16: Installation of privacy glass is complete with shiny side out and logo on the bottom left corner



Privacy Glass Installation Instructions

STEP 17: Check the squareness of glass



STEP 18: If needed, pull in the opposite direction and check again



STEP 19: When installation is fully satisfactory, cut protruding plastic seal with exacty knife



INSTALLATION GUIDELINES

Privacy Ceiling filler Install

Parts List

1 Felt
2 Aluminum Top Trim with channel
3 12” Spacer Clip
4 Block
5 Ceiling filler PVC Cap

STEP 1: Ceiling filler includes standard felt divider and PVC cap

STEP 2: Try top trim on top of panel without blocks installed and measure distance from top trim to ceiling

STEP 3: With sharp knife using straight ruler cut felt to a little smaller than required height

STEP 4: On firm surface assemble felt with trim then push PVC cap on felt

STEP 5: Align Felt evenly within the channel

STEP 6: Push Felt down firmly and evenly into the channel.

STEP 7: Push PVC cap on Felt top

STEP 8: Remove strips off of tape underneath 12” Spacer Clip (#3) and locate in middle of panel.

STEP 9: Remove existing pan head screws just outside the single panel clamps, from the top horizontal rail. Place Blocks (#4) into position over screw hole and secure using the same screw previously removed.

STEP 10: Tilt assembled felt with trim to one side and start putting it on top of panel on blocks, then rotate it to be straight on panel top and push trim down on both sides until trim snaps on blocks. Make sure that ends of trim align with center of connector slots.

STEP 11: Align felt and then push up PVC cap against ceiling to close gap

Note.
Felt height should be such that it easily clears ceiling during installation

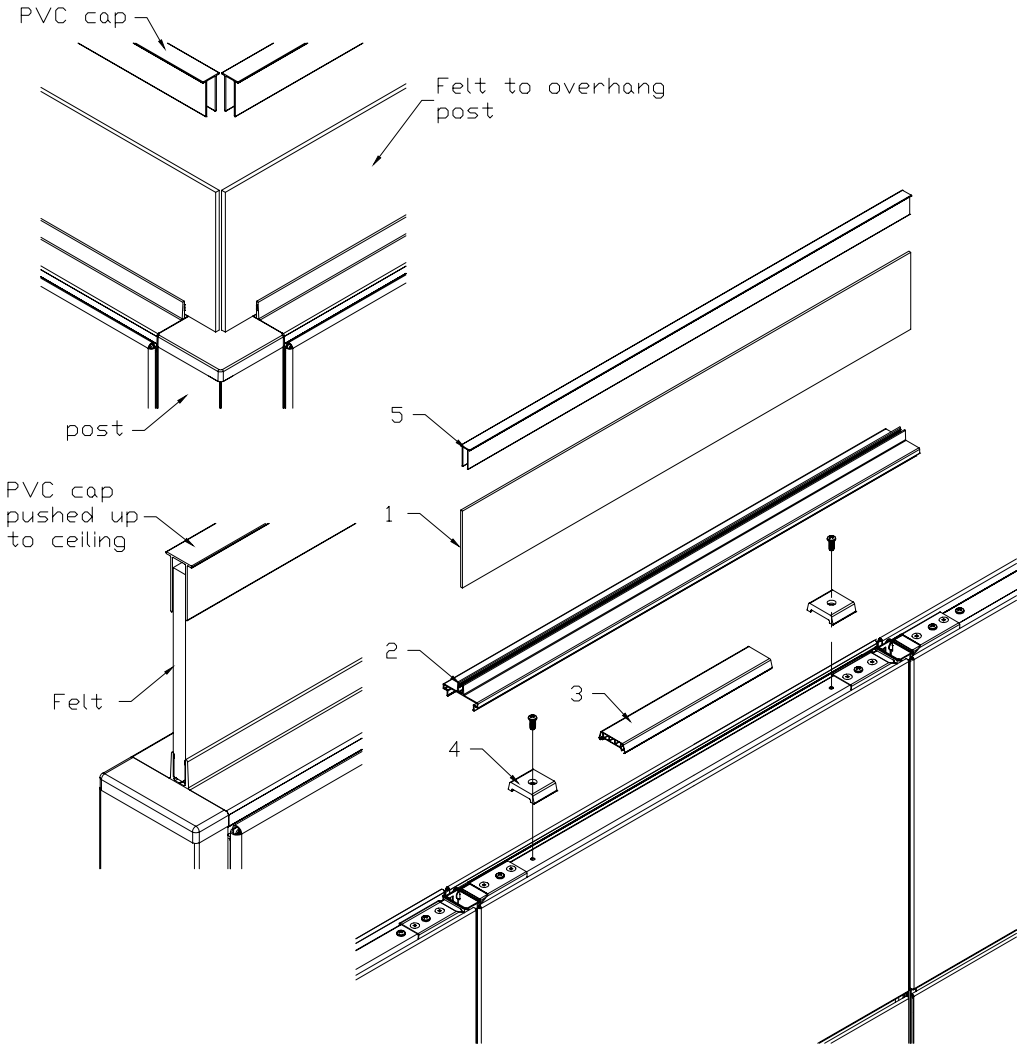

INSTALLATION GUIDELINES

Door Panel Installation

STEP 1: The door is ordered with either a left or a right swing. Check layout for proper placement and swing. It can be easily changed on site from one side to another. Please see the instructions below.

Door must be in the closed position (inside the frame) during installation.

STEP 2: Attach door panel to an existing run as you would any other panel.

STEP 3: Level the door using glides on the connectors.

Ensure that the door frame is spread out to maximum width at the threshold before locking.

There is no lateral adjustment of the threshold.

Door MUST be perfectly level and square to work properly.

STEP 4: Install lever hardware.

STEP 5: Upon completion of door installation, check entire installation to ensure all panel to panel connectors are in place for a structurally sound wall and door unit.

What to do if door is not closing properly:

STEP 1: Door MUST be perfectly level and square.

STEP 2: Ensure that the door frame is spread out to maximum width at the threshold before locking.

STEP 3: Ensure the hinges that are attached to the door are flush with the edge of the door. If this is not the case, solid doors can be turned upside down, hinges and lever can be reversed.

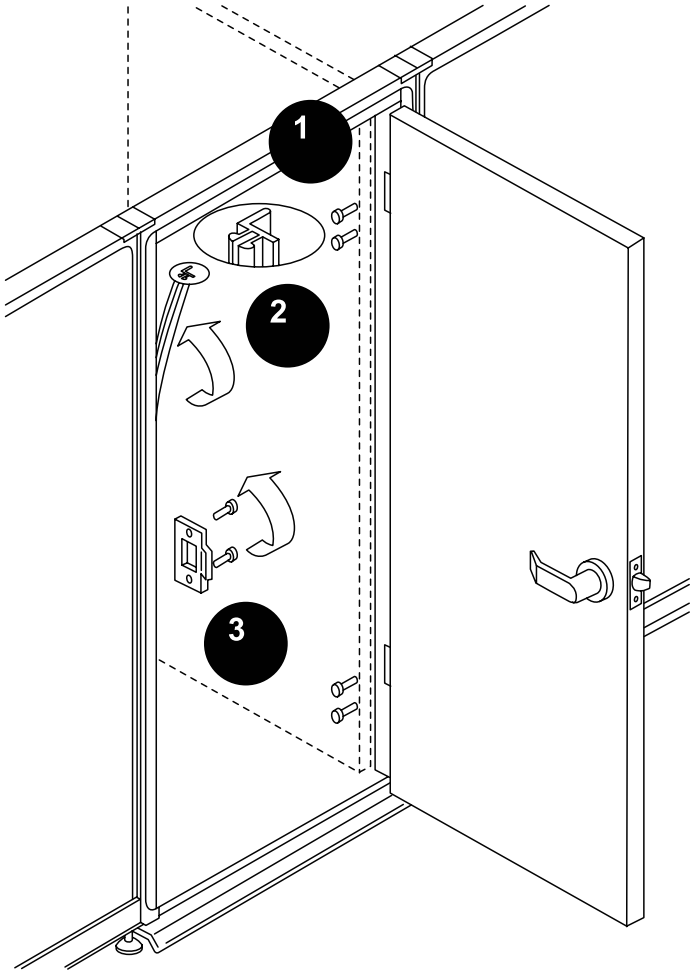

Door Panel Installation - Changing the door swing

STEP 1: Remove the hinges from the door frame.

STEP 2: Pull out door stop extrusion, reverse and snap back in.

STEP 3: Remove, rotate and re-attach the striker plate.

STEP 4: Rotate door so that the top is at the bottom. Rehang door in the frame.

To change swing direction of glazed door, rotate hinges on door as well as the door lock direction.

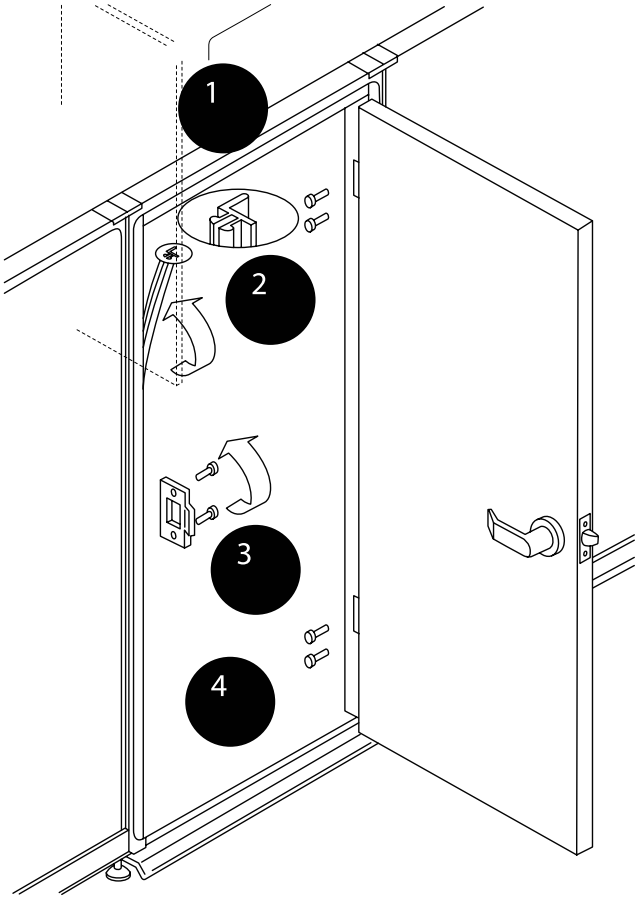

INSTALLATION GUIDELINES

Privacy Screen

DELISTED

The Privacy Screen provides enclosure and semi-privacy to a station.

Privacy Screen can be mounted "on module" only onto 36" and 42" wide panels, minimum height of 66".

STEP 1: Determine the top and bottom of the Privacy Screen. The brackets with three teeth go at the top, while the brackets with two teeth go at the bottom.

STEP 2: Determine if the Privacy Screen is a left or a right. The direction of the slide determines this. The Privacy Screen is mounted to the panel directly beside the opening, OPPOSITE to the direction of the slide.

STEP 3: Ensuring the door is level, insert the upper teeth into the panel at the appropriate height. (Uppermost slot on 66" high panels.)

STEP 4: Ensuring all four bracket positions are lined up to their intended slots, push the brackets in and down.

Be careful, the sliding door can easily move on its Screen Slides.

STEP 5: Push the rotating clips on all four brackets into the panel slots. The clips prevent dislodgment of the brackets.

STEP 6: Upon completion, ensure the door operates properly across the full length of the Screen Slide.

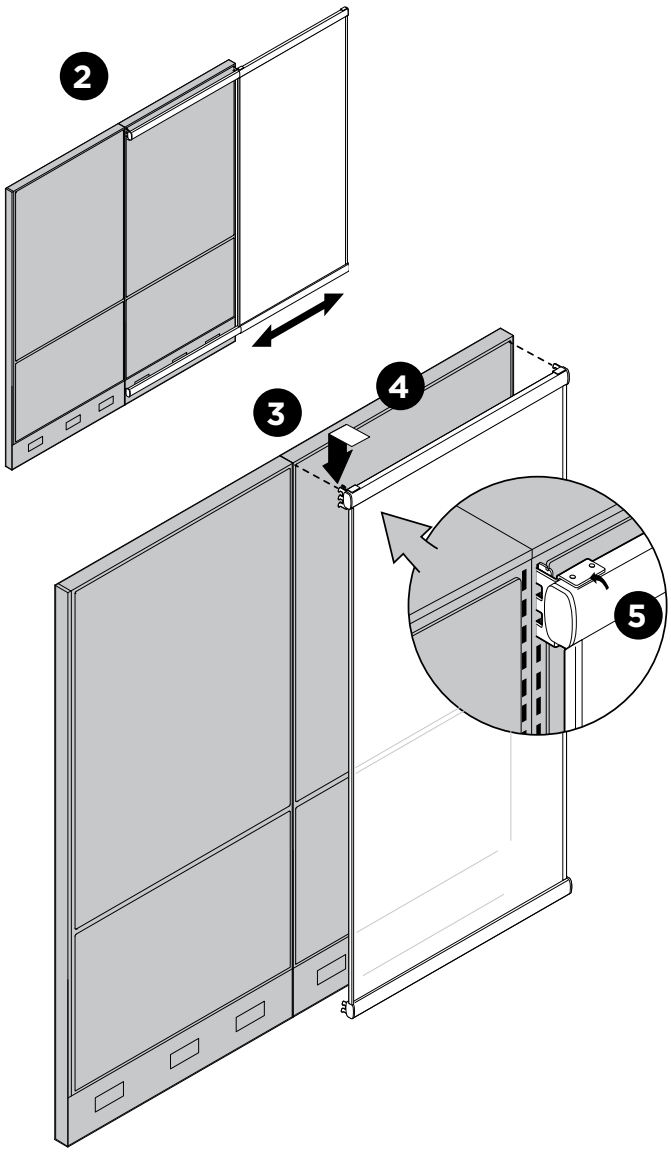

Reverse Sliding Door

Steps to Change Direction

STEP 1: Using a small knife to peel off the end cap (be careful not to break the hooks of the end cap).

STEP 2: Unscrew the end stop. Then Flip the end stop 180° and screw the end stop into the opposite bar.

STEP 3: Repeat steps 1 and 2 for the other side.

STEP 4: Do the same thing for the top and bottom bars.

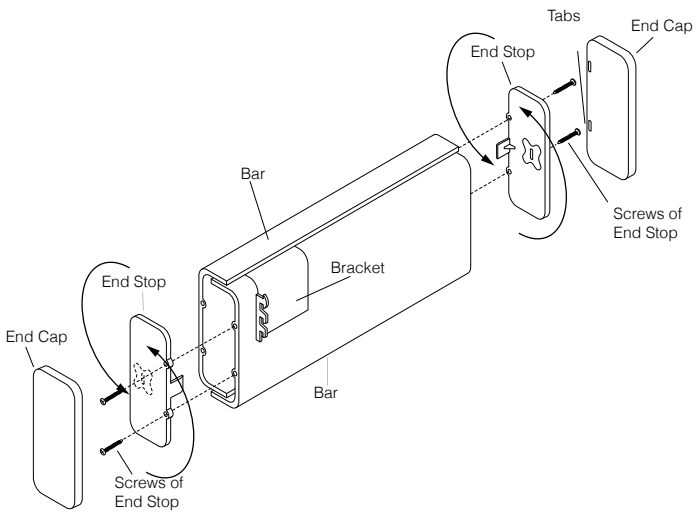

Sliding Panel Door Lock

DELISTED

If the floor is carpeted, ensure that carpet grippers (included in hardware packet) are installed on the levelers of the panels, mainly in door / opening. For permanent positioning, Floor Mount Plate is recommended.

STEP 1: Locate and install the left or right bracket with faceplate.

STEP 2: Secure with supplied screws (1-1/2" for fabric module or 3/4 for aluminum frame).

STEP 3: Secure lock cam in open position. (Usae wire or a paper clip).

STEP 4: Close the door and insert lock cam (Plunger) into the face plate.

STEP 5: Keep lock assembly and door tight together. Request help to accurately trace points by marker on the door. Mark the location of the pilot holes they must be on the inside, of the workstation side, of the acrylic screen.

The lock bracket assembly must be flush with the door acrylic side.

STEP 6: First drill the upper pilot hole. Do not push on the drill. While drilling, be careful not to force any aluminum shavings into the interior of the plastic flutes, as they may become visible.

STEP 7: Secure supplied screws (#8 1/2") to lock assembly and door.

Test the lock function.

STEP 8: If the location is correct, drill the second hole and secure with the supplied screw.

STEP 9: Apply plastic lock assembly cover.

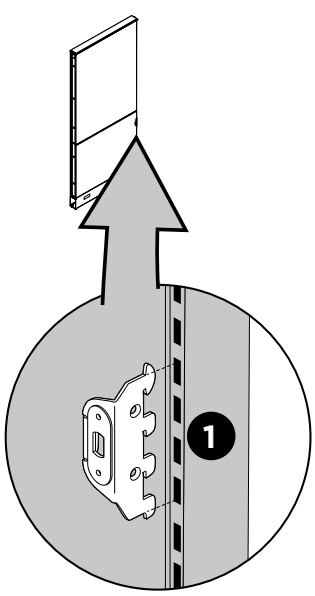

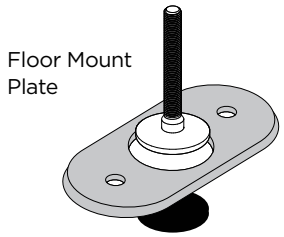

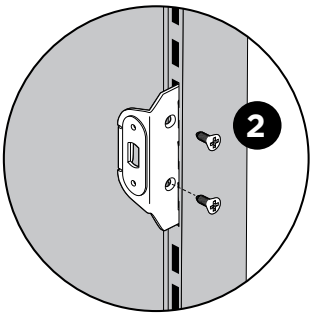

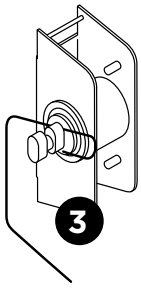

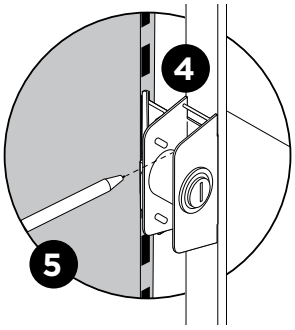

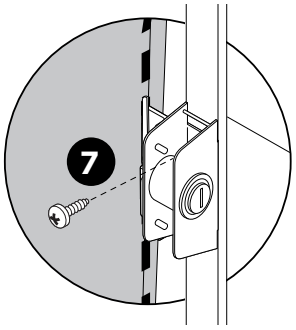

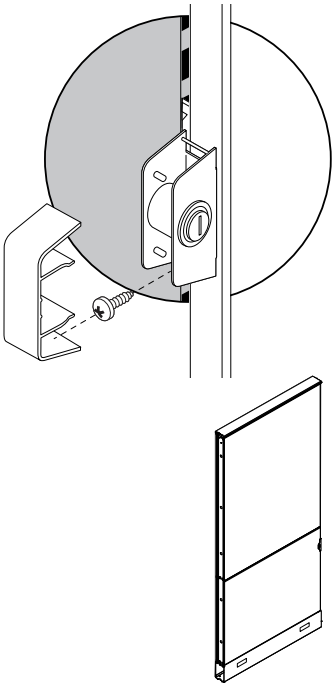

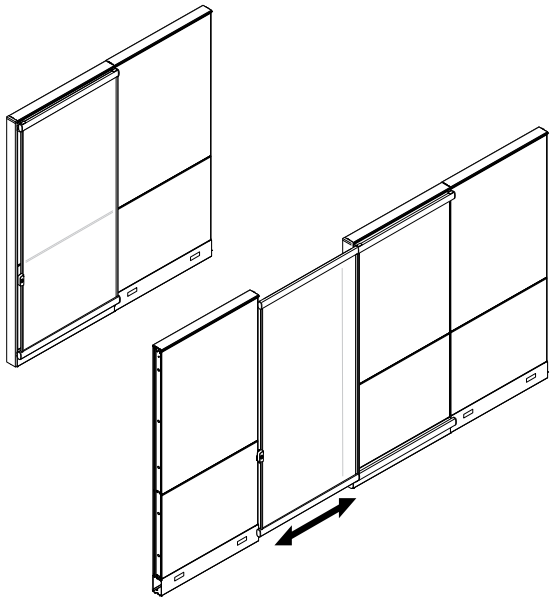

INSTALLATION GUIDELINES

Evolve Panel Removal

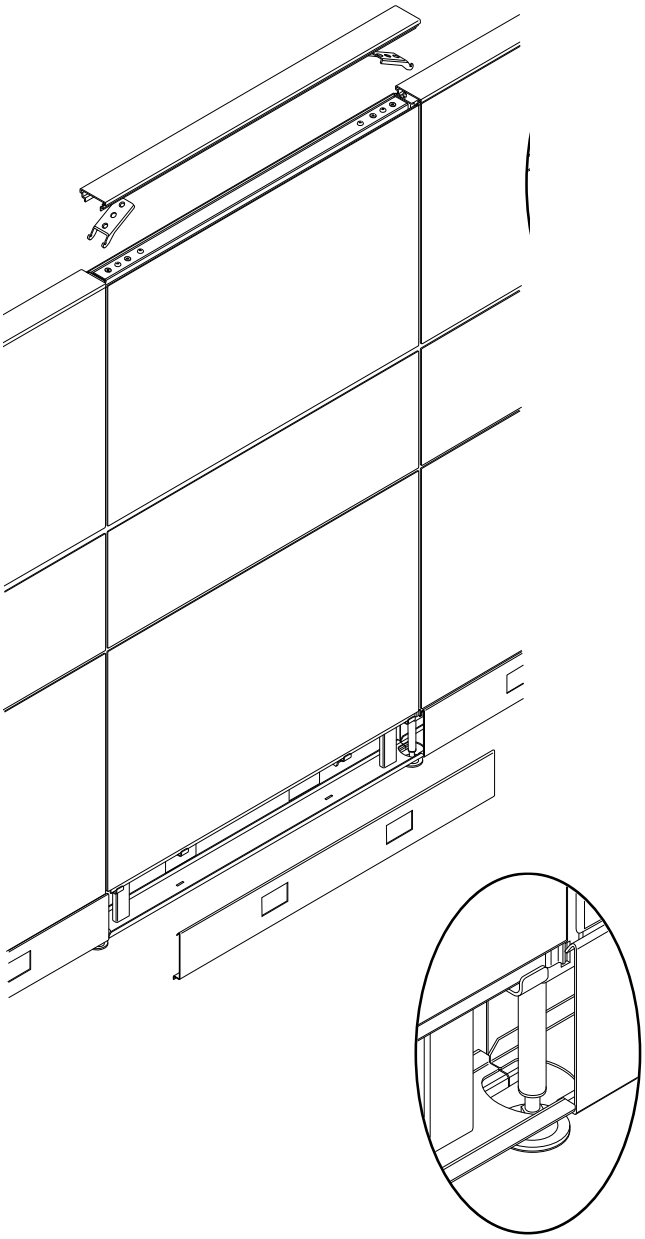

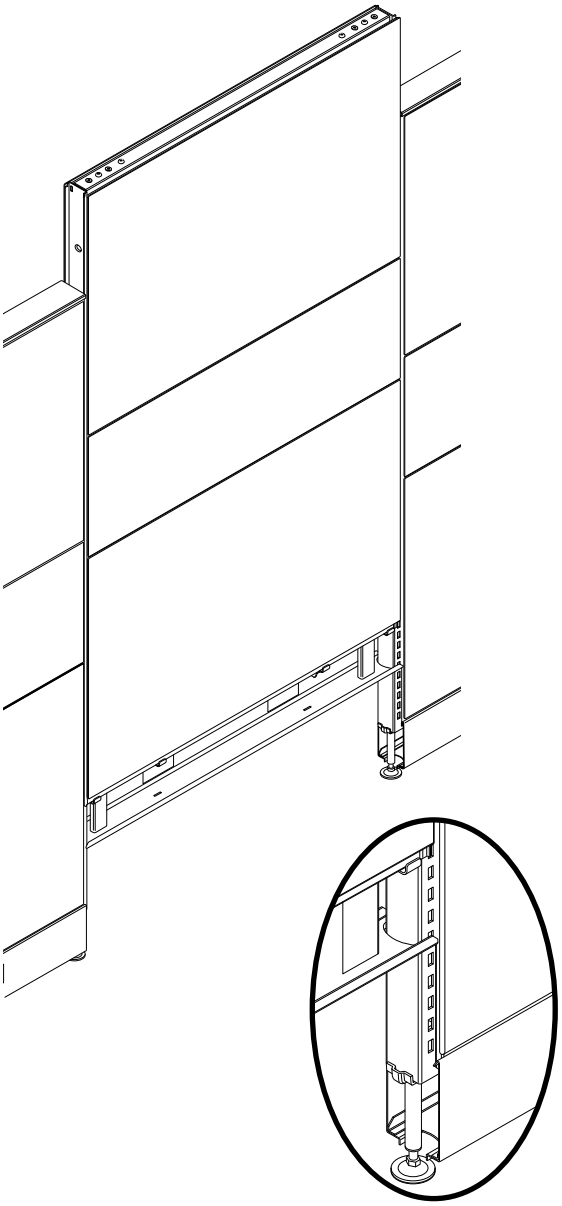

Evolve Module Removal

Disassembly of an Evolve panel can be done on site. The panel must first be removed from the panel run and turned on its side.

Step #1. Remove the screws from the metal side frame.

Step #2. Remove the two (2) bolts that hold the side frame to the top horizontal tube.

Step #3. Remove the side frame from the panel.

Step #4. Slide the selected module out of the panel.

Step #5. Slide the replacement module into the panel and reverse the procedure.

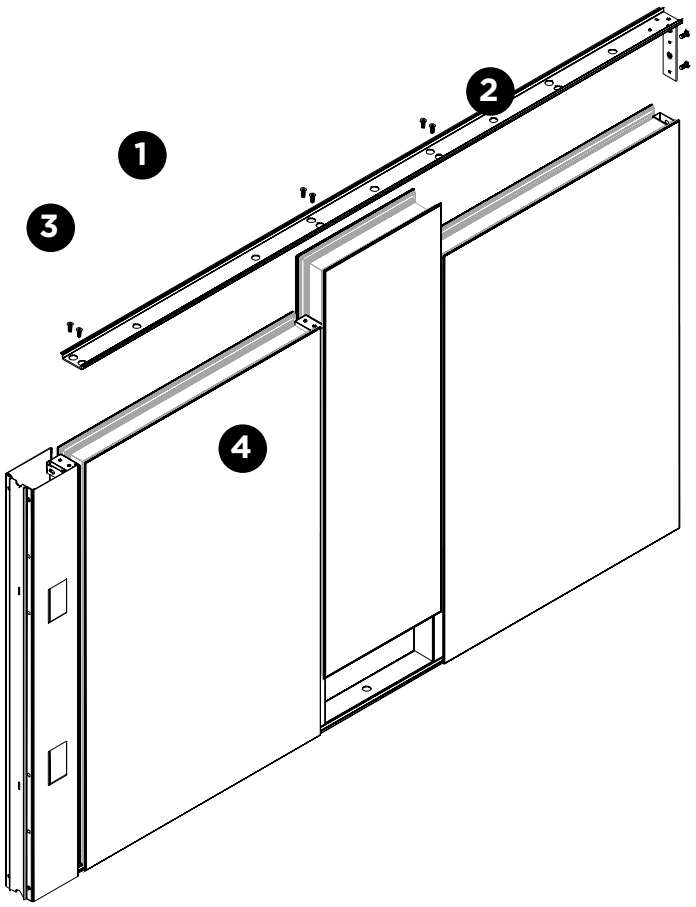

INSTALLATION GUIDELINES

Mobile/Freestaning Monolithic Privacy Panels

STEP 1: Connect the Bridge Panel (1) to the Connectors (2) using four clamps (6) with two 1/2" flat head screws. Two clamps at the top and two and the bottom.

STEP 2: Insert Connector Foot (3) into bottom of Connectors (2)

STEP 3: Attach the plastic spacers (7) to the top and bottom of the Bridge Panel. The plastic blocks (7) are to be attached with adhesive tape included.

STEP 4: Install Top Trim (5) and Bottom Trim (8).

STEP 5: Install the spring clips (10) using the supplied self drilling screws to the sides of the Connectors using the supplied self drilling screws and snap on the End Trims (9)

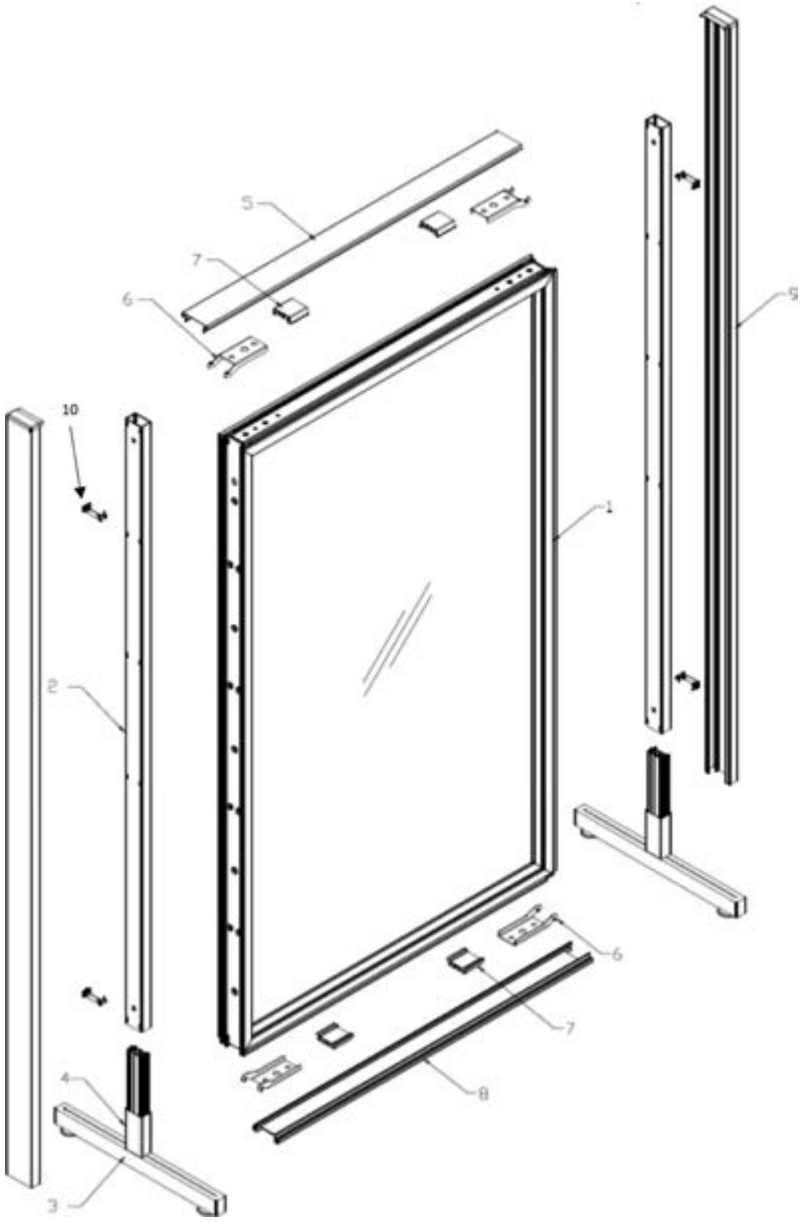

Mobile/Freestaning Monolithic Privacy Panels

STEP 1: Connect the Bridge Panel (1) to the Connectors (2) using four clamps (6) with two 1/2" flat head screws. Two clamps at the top and two and the bottom.

STEP 2: Insert Connector Foot (3) into bottom of Connectors (2)

STEP 3: Attach the plastic spacers (7) to the top and bottom of the Bridge Panel. The plastic blocks (7) are to be attached with adhesive tape included.

STEP 4: Install Top Trim (5) and Bottom Trim (8).

STEP 5: Install the spring clips (10) using the supplied self drilling screws to the sides of the Connectors using the supplied self drilling screws and snap on the End Trims (9)

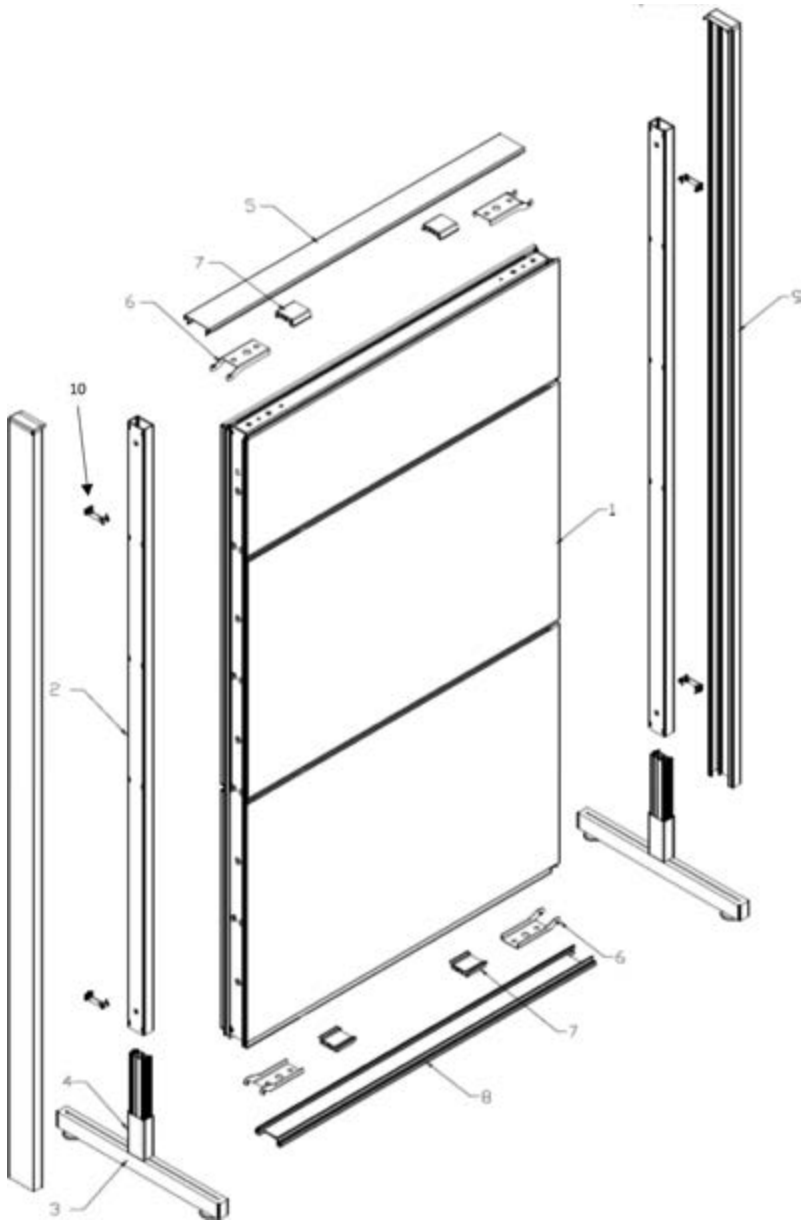

INSTALLATION GUIDELINES

Wiring Schematic

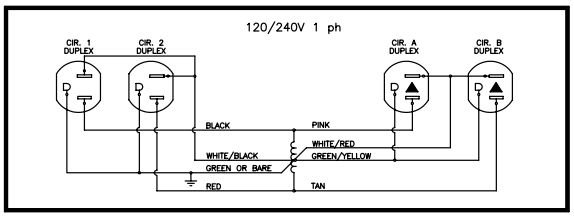

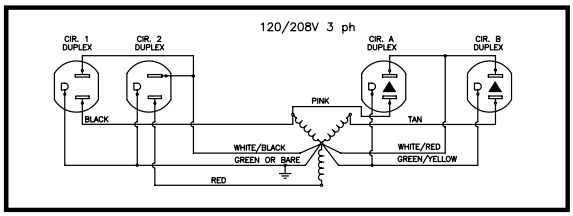

4-2-2 Wiring Schematic
8-Wire Shared Neutral
"2+2" – 2 Utility circuits, 2 dedicated

8 Wires
4 Lines (12 ga.)
2 Neutrals (10 ga.)
2 Grounds (12 ga.)

4 Circuits
2 Utility Circuits
2 Dedicated Circuits

Receptacles
Duplex – Up to 12 receptacles per circuit (Up to 48 infeed)

Specifications
System rated for connection to a grounded 120/240 V, single phase, 20A, 60Hz or 120/208 V, 3 phase, 20A, 60Hz branch circuit for U.S. and 15A if product is marked with a C-UL Mark. Outlets rated 15A max.

Warning:
It is recommended that installation of the electrical harness be made under the supervision of electrician in accordance with applicable codes and regulations.

Special Note: Always determine that harness is electrically connected to only one power supply.

Power Distribution Housing

Parts List
1 Power Distribution Housing

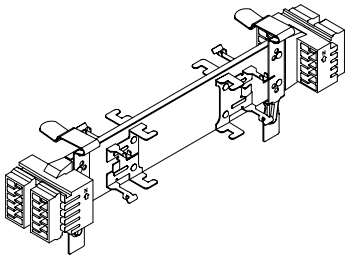

A Power Distribution Housing is connected to the panel base raceway channel to create a powered panel. It serves to provide a point of attachment and electrical connection for duplex receptacles, flexible harness connectors, and power entry components.

Ensure that all panels are mechanically connected prior to electrical connection.

STEP 1: Raceway covers must be removed to allow installation.

STEP 2: Attach the Power Distribution Housing to the panel raceway channel. To do this, slide the bottom fingers of the spring clips "A" (attached at either end of the Power Distribution Housing) into the slots in the bottom of the raceway channel and snap the top of the spring clips "B" into the brackets provided at the top of the raceway, "C" above the slots.

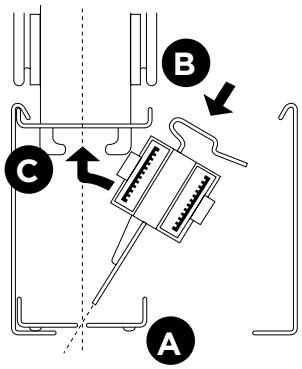

STEP 3: Replace the raceway cover.

Pass-Through Cables

Parts List

1 Jumper Cable or Pass-Through Cable

Jumper Cables and Pass-Through Cables are utilized to electrically connect Power Distribution Housings in panels that have been mechanically linked. Jumper Cables electrically connect Power Distribution Housings in two adjoining powered panels or two powered panels separated by a post. Pass-Through Cables electrically connect power Distribution Housings in two powered panels that are separated with one or more non-powered panels.

Ensure that all panels are mechanically connected prior to electrical connection.

STEP 1: Position the Jumper Cables and Pass-Through Cables between the appropriate Power Distribution Housings. Orient the connectors and plug them together. Be sure the parts are fully seated and latched to ensure proper electrical connection and mechanical security.

STEP 2: Replace the raceway cover.

Note: EVECJ16 “A” is a jumper cable that incorporates a flat festoon harness used to electrically connect two adjoining powered panels in a line.
EVECJ20 “B” is a jumper cable that incorporates a flexible conduit harness that electrically connects two powered panels in a line separated by a post, or two powered panels positioned at 90° and mechanically connected by a post.

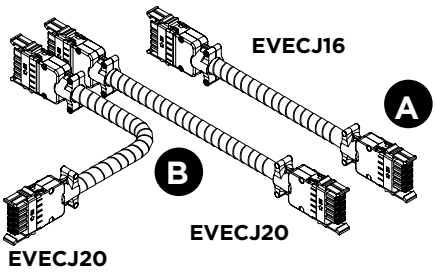

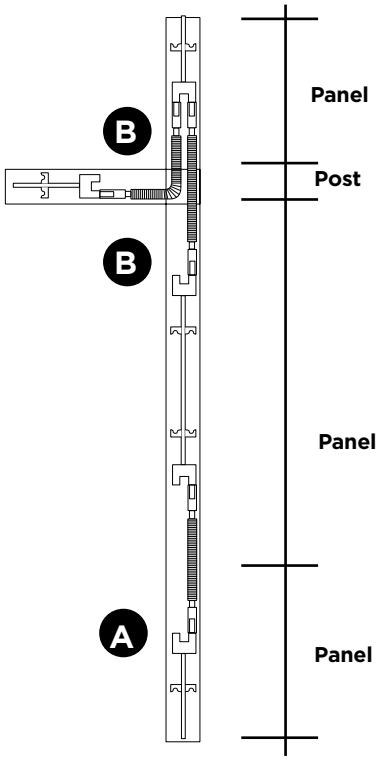

INSTALLATION GUIDELINES

Reverseable Floor Power Entry

Parts List
1 Reverseable Floor Power Entry

The Floor Power Entry is used to connect the electrical distribution system to the building power network at a floor level junction box.

Ensure that all panels are mechanically connected prior to electrical connection.

STEP 1: Conduit can be run in reverse direction by removing the housing cover, “A” rotating the conduit and replacing the housing cover, ensuring that all four (4) screws in the cover are tight.

STEP 2: Proceed with the installation as per the Directional Floor Power Entry (page 14).

STEP 3: Replace the raceway cover.

It is recommended that installation of the electrical harness be made under the supervision of a licensed electrician in accordance with applicable codes and regulations. Refer to the wiring schematic attached to the conduit and shown in this Installation Manual. Always determine that harness is electrically connected to only one power supply.

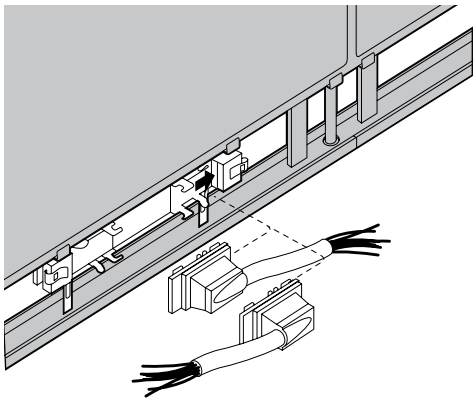

Ceiling Power Entry

Parts List
1 Ceiling Power Entry

A Ceiling Power Entry is used to connect the electrical distribution system to the building power network at an above ceiling level junction box. The Ceiling Power entry is installed by plugging directly into a Power Distribution Housing. The procedure is similar to Jumper Cable/Pass- Through Cable installation and the connection is the same.

Ensure that all panels are mechanically connected prior to electrical connection.

STEP 1: Locate the appropriate connection point in the panel raceway channel. The raceway cover must be removed to allow installation.

STEP 2: Locate nearest corner post and remove center portion only of
two piece post top cap. (Use PVC top cap EVCPC01

STEP 3: Identify proper length of post extension. (Cut to desired length if necessary.) Make sure that post extension will extend above ceiling tile.

STEP 4: Cut hole (slightly larger than the post extension) in ceiling tile directly above the corner post.

STEP 5: Slide post extension through cut-out in ceiling tile and mechanically attach it to the corner post through the top cap.

STEP 6: Feed the open end of the Ceiling Power Entry assembly from the raceway channel to the ceiling through a corner post and post extension.

STEP 7: Position the Ceiling Power Entry assembly at the end of the appropriate Power Distribution Housing and plug them together. Be sure the parts are fully seated and latched to assure proper electrical connection and mechanical security.

STEP 8: Replace the raceway cover.

It is recommended that installation of the electrical harness be made under the supervision of a licensed electrician in accor- dance with applicable codes and regulations. Refer to the wiring schematic attached to the conduit and shown in this Installation Manual. Always determine that harness is electrically connected to only one power supply.

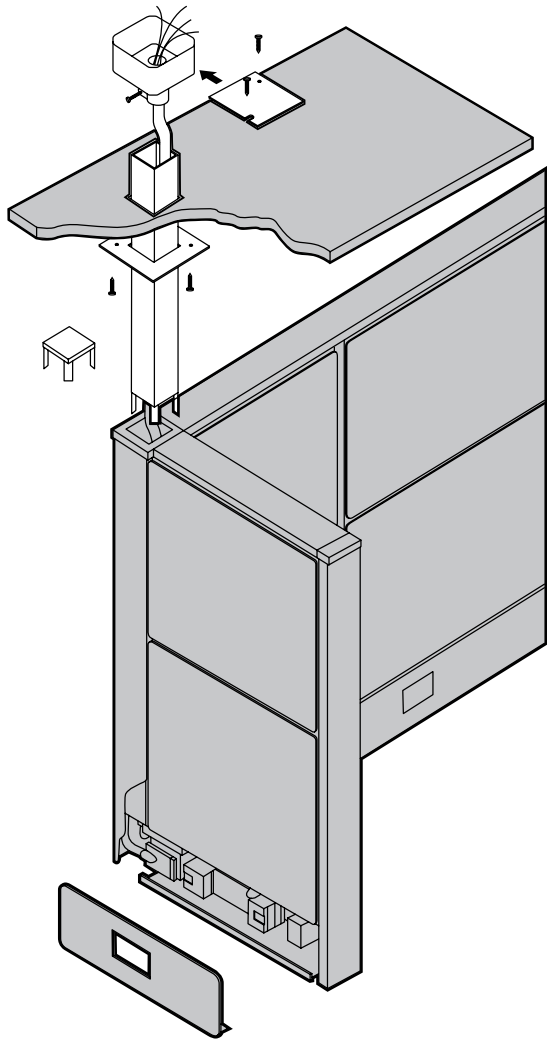

INSTALLATION GUIDELINES

Duplex Receptacle

Parts List
1 Duplex Receptacle

The Duplex Receptacles plug into and mechanically attach to the Power Distribution Housings. The receptacle is internally arranged to connect to the circuitry designated by the symbol on its face.

Ensure that all panels are mechanically connected prior to electrical connection.

STEP 1: Raceway covers must be removed to allow installation.

STEP 2: Select the correct receptacle for the circuit desired at that location.

STEP 3: Position the receptacle into the mounting bracket on the Power Distribution Housing and slide it in toward the electrical assembly. Be sure the parts are fully seated to assure proper electrical connection and the spring lips below the receptacles are properly engaged for mechanical security.

STEP 4: Replace the raceway cover.

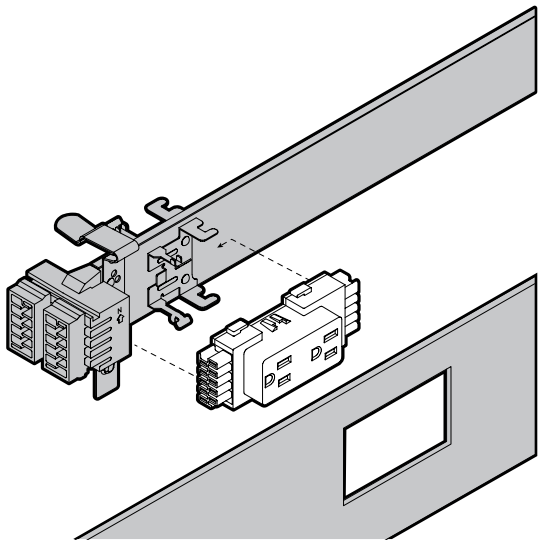

Cable Capacity

Cable Capacity
With and without Electrics
All Cables are 0.354” in diameter.
Capacity of the empty raceway is 24 wires.
Capacity of the raceway with electrics installed is 24 wires.

Without Electrics

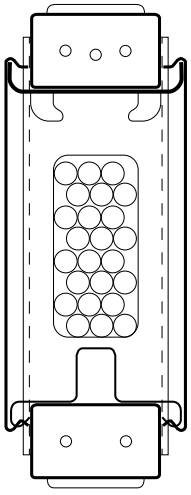

With Electrics

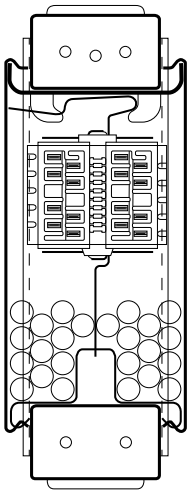

Raceway Cable Capacity
With and without Electrics
All Cables are 0.354” in diameter.
Capacity of the empty raceway is 56 wires.
Capacity of the raceway with electrics installed is 22 wires.

Without Electrics

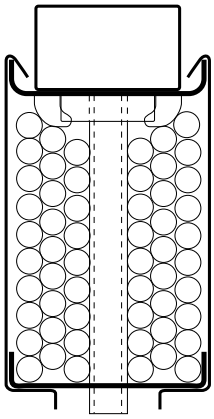

With Electrics

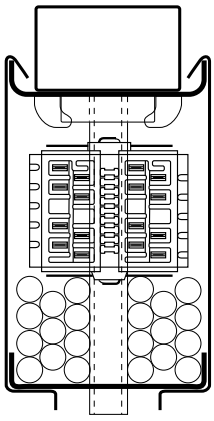

Ceiling Post
With and without Electrics
All Cables are 0.354” in diameter.
Capacity of the empty raceway is 22 wires.
Capacity of the raceway with electrics installed is 17 wires.

Without Electrics

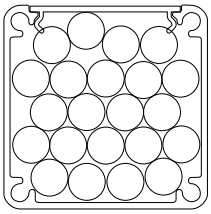

With Electrics

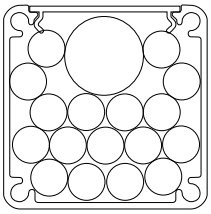

Conduit Installed

INSTALLATION GUIDELINES

End Panel

Parts List
1 End Panel

An End Panel attaches a worksurface to a panel connector and provides solid support at the end of a run of worksurfaces.

Identify correct setting of worksurface mounting brackets (left and right, single or supporting adjacent worksurface) and install the panel mounting bracket accordingly.

STEP 1: Align the holes of the panel mounting bracket with the pilot holes of the End Panel.

STEP 2: Drive the supplied screws into the End Panel.

STEP 3: Hook the End Panel into the slotted connector and tap with a rubber mallet to ensure that the bracket is securely engaged in slots.

STEP 4: Adjust the levelers while making sure that the brackets do not disengage from the slotted connector.

Proceed with the installation of the worksurfaces.

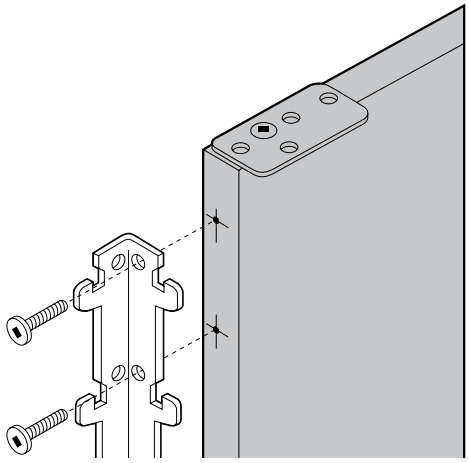

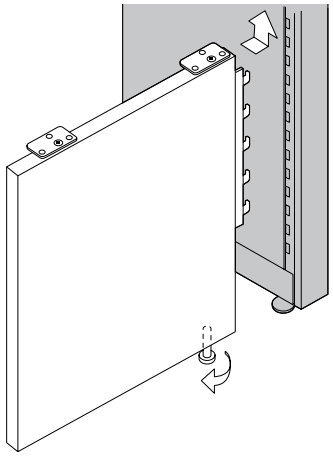

Corner Brackets

Parts List
2 Corner Brackets

A Corner Bracket attaches the corner of any worksurface to a panel connector.

STEP 1: Identify correct bracket (left or right).

STEP 2: Insert upper corner of bracket into panel slot and pull upward.

STEP 3: Pivot downward and latch in remainder of bracket.

STEP 4: Set bracket securely in panel slots with rubber mallet.

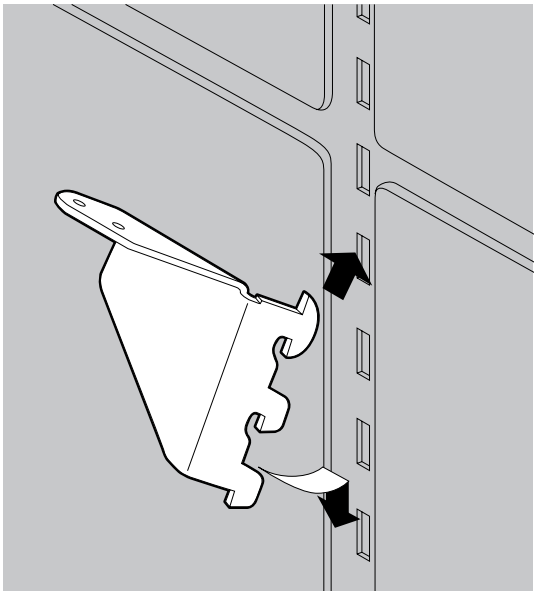

Cantilever

Parts List
1 Cantilever

A Cantilever attaches a worksurface to a panel connector and may be used to support two convergent worksurfaces.

Identify correct setting of brackets (left, right, single or double worksurface support).

STEP 1: Identify correct setting of brackets (left, right, single or double worksurface support).

STEP 2: Insert upper corner of metal bracket into panel slot and pull upward.

STEP 3: Pivot downward and latch in remainder of metal bracket.

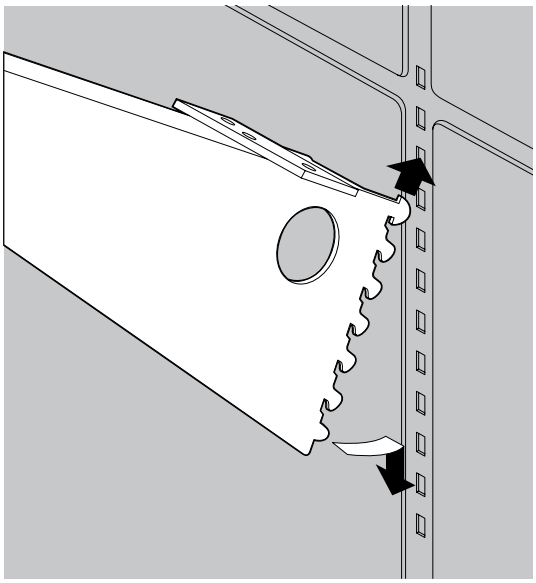

Support Leg

Parts List
1 Support Leg

A Support leg is used in conjunction with a Cantilever to provide extra worksurface support where needed. It may be used to support two convergent worksurfaces.

STEP 1: Locate the Support Leg under the (installed) Cantilever and engage hooks into the panel connector slots. Pull the Support Leg up to engage the slots.

STEP 2: Attach the Support Leg to the Cantilever by installing the two (supplied) screws as shown.

STEP 3: Adjust the glide at the bottom of the Support Leg/Cantilever combination to ensure correct support for the worksurface.

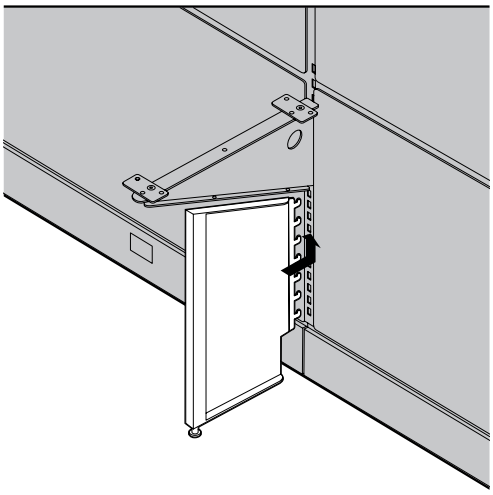

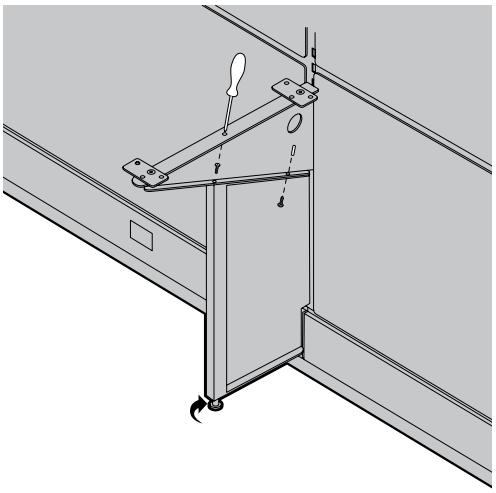

INSTALLATION GUIDELINES

Worksurface Supporting Pedestals

Parts List

1 Worksurface-supporting pedestal

According to your plan, select the type of pedestal which is going to be used as a worksurface support. Identify which side of the pedestal is to be attached to the panel slots and install the panel mounting bracket accordingly.

STEP 1: Align the outer corner of the bracket with the outer corner of the pedestal, just below the top lip. “A”

STEP 2: Hold the bracket in position and drive the supplied four self-drilling screws through the bracket into the rear wall of the pedestal.

STEP 3: Screw the glides all the way into the pedestal.

STEP 4: Hook the pedestal into the panel and tap with a rubber mallet to ensure that the bracket is securely engaged in the panel slots.

STEP 5: Remove drawers.

STEP 6: Adjust all pedestal levelers while making sure that the bracket did not disengage from the panel.

Proceed with the installation of the worksurfaces.

STEP 7:Predrill holes at suggested locations. Fasten the pedestal by driving three screws through the pedestal into the worksurface.

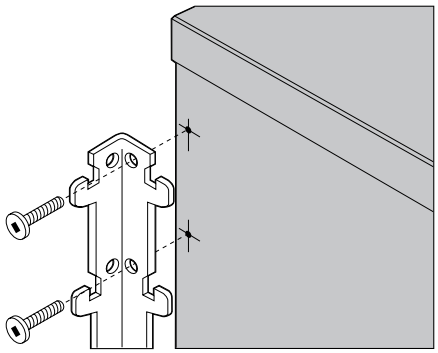

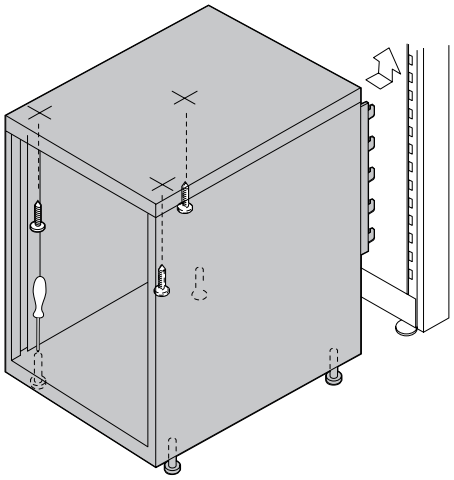

Laminate End Panels

STEP 1: Insert hooks of brackets in the panel slots and pull down.

STEP 2: Push up top brackets and tighten screw to secure panel.

STEP 3: Attached worksurface brackets.

STEP 4: Put worksurface on the worksurface brackets, attach with screws.

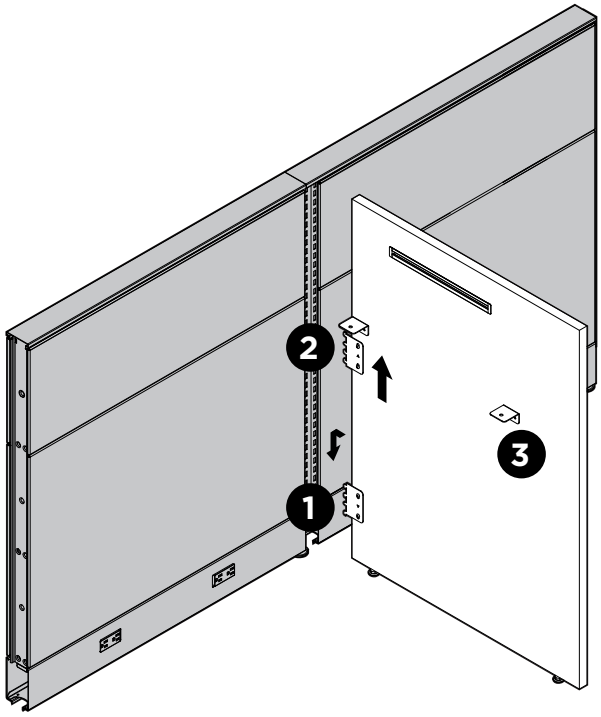

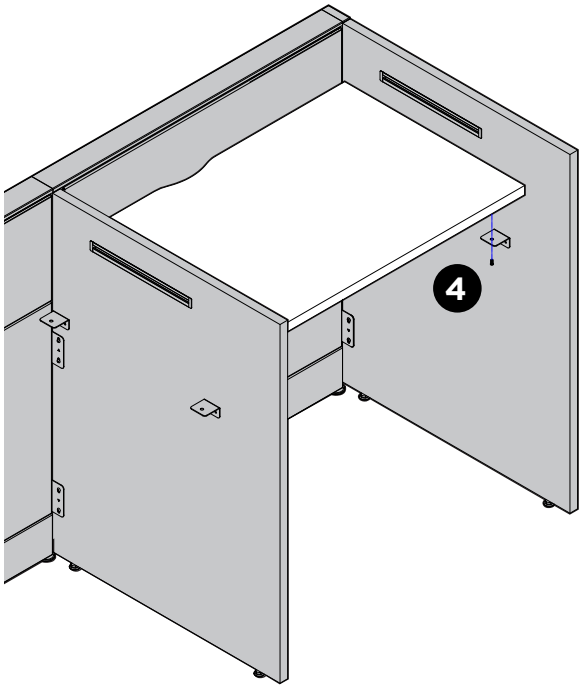

Optional Accessory Rail

STEP 1: Put caps at rails end.

STEP 2: Push rail with caps in groove.

The rail stays tight in groove.

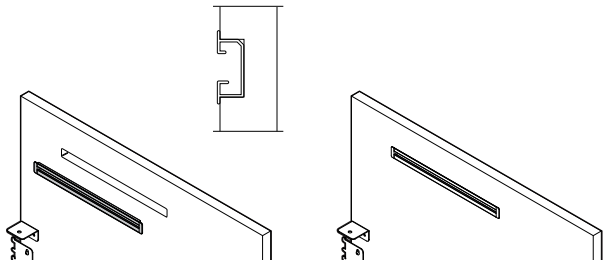

INSTALLATION GUIDELINES

Overhead Flipper Door Storage Unit

Parts List

1 Overhead Flipper Door Storage Unit

Identify both left and right shelf gables and determine their location on panel.

STEP 1: Insert upper hook of metal bracket into panel slot and pull upward.

STEP 2: Pivot downward, latch in remainder of the gable and tap with a rubber mallet to ensure a structurally sound connection.

STEP 3: When both end brackets are set, position a shelf on brackets and align holes.

STEP 4: Secure shelf by driving supplied screws through the bracket into the bottom shelf.

To install a top and door assembly.

STEP 5: Position the top and door assembly on the top ledge of the end bracket assembly.

STEP 6: Secure by driving supplied screws through the top ledge into the metal top.

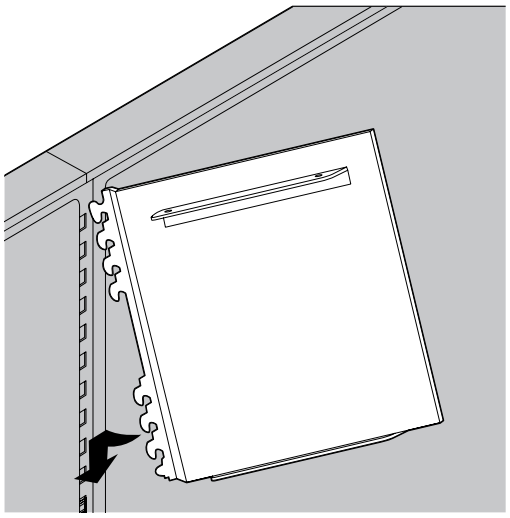

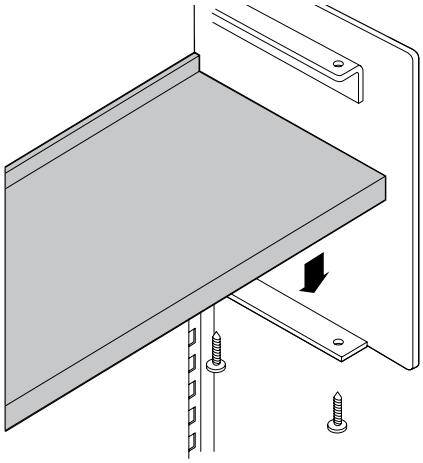

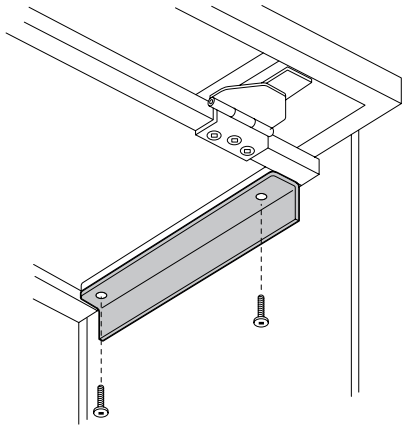

Corner Shelf

Parts List
1 Corner Shelf
1 Flat Bracket

Corner Shelf was developed for better utilization of a space above Corner Worksurface.

Identify left or right corner shelf end bracket and determine its location on a panel.

STEP 1: Insert upper hook of the metal end bracket into the panel slot and pull upward.

STEP 2: Pivot downward and latch the remainder of the end bracket.

STEP 3: Align one hole in the flat bracket with the first hole in the existing full-length shelf and secure with supplied screw.

STEP 4: Position the Corner Shelf on the flat bracket and the end bracket.

STEP 5: Proceed by securing the Corner Shelf to the end bracket first.

STEP 6: Secure the Corner Shelf on the other side to the flat bracket.

STEP 7: Align both shelves and secure by driving a self-drilling screw through the flat bracket to the adjacent shelf.

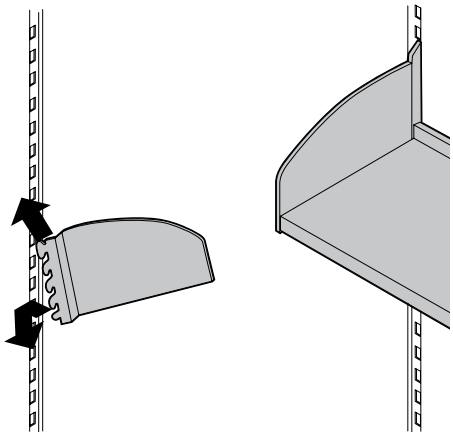

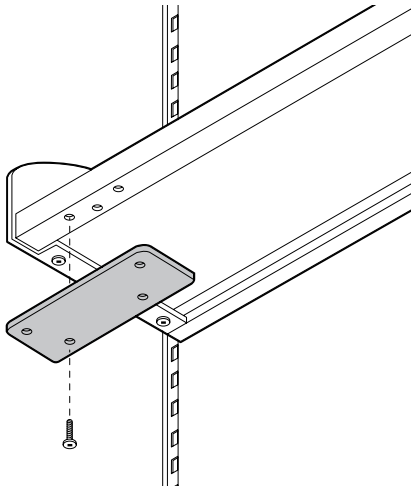

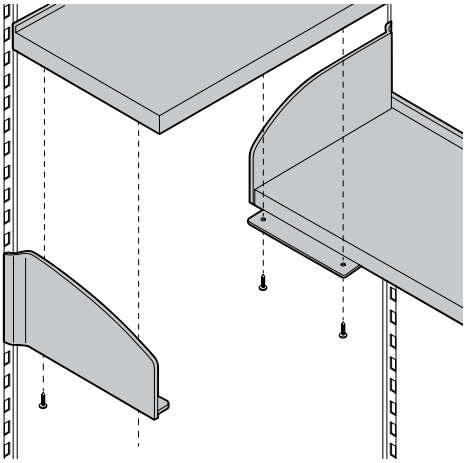

INSTALLATION GUIDELINES

Low-Profile Shelf

Parts List
1 Low-Profile Shelf

A Low-Profile Shelf is usually installed so that the bottom aligns with the bottom of the adjacent unit.

Identify left or right shelf brackets and determine their location in the panel slot.

STEP 1: Insert upper hook of metal end bracket into panel slot and pull upward.

STEP 2: Pivot downward and latch in the remainder of end bracket.

STEP 3: When both end brackets are set, lay shelf on end brackets and
align screw holes.

STEP 4: Secure shelf by driving supplied screws through the end bracket and
into bottom of shelf.

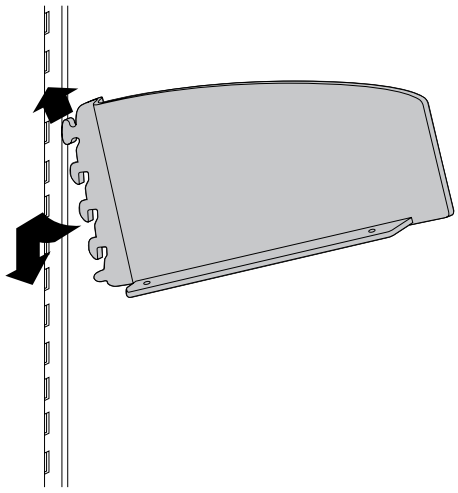

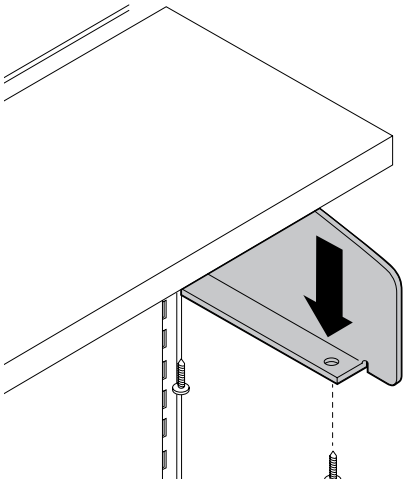

Top Mount Overhead Installation

Parts List

1 EVSSOHBKTS Inline Single Top Mount Overhead Bracket
2 Side Gables
1 Laminate Divider
2 Metal Back
2 Overhead Shelf – Top and Bottom
2 Sliding Glass
4 Plastic Extrusion for Sliding Door #1
4 Plastic Extrusion for Sliding Door #2

STEP 1: Install EVSSOHBKTS brackets into panel connectors.

STEP 2: Drop shelf onto metal inserts.

STEP 3: Install laminate divider and secure by using flat head wood screw.

STEP 4: Install side laminate gables by using 4-20 x 1" pan head screws. Secure metal insert, bottom self, too.

STEP 5: Install top shelf, secure divider by using flat head wood screw and gables by using 1/4-20 x 1/2" screws.

STEP 6: Install metal back panels by tilting panel into the assembly. Secure with wood screws on 4 sides.

STEP 7: Install plastic extrusion #1 on all edges of the shelves. Secure with self tapping screws.

STEP 8: Snap plastic extrusion #2 on the bottom shelf first. Hold glass on the extrusion until step 9.

STEP 9: Secure glass by snapping plastic extrusion #2 onto top shelf.

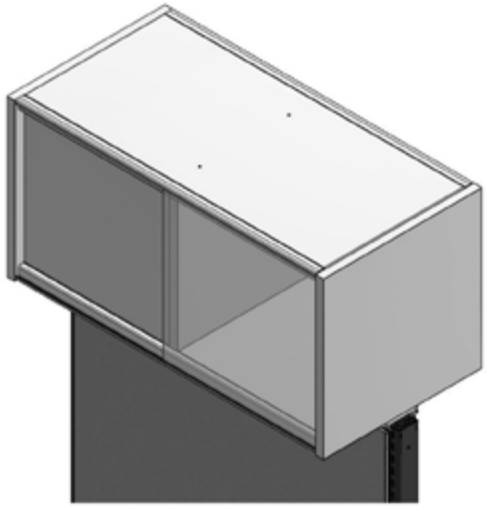

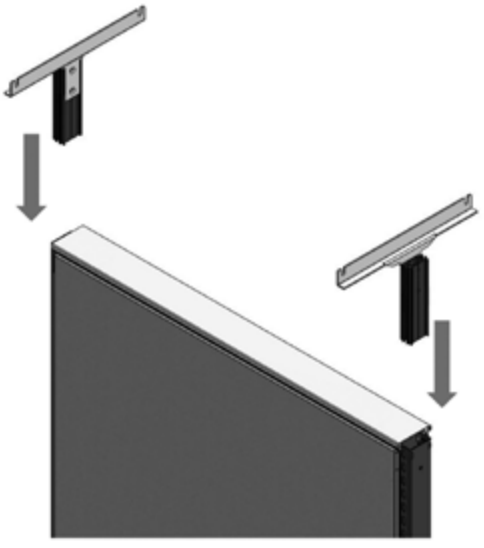

1

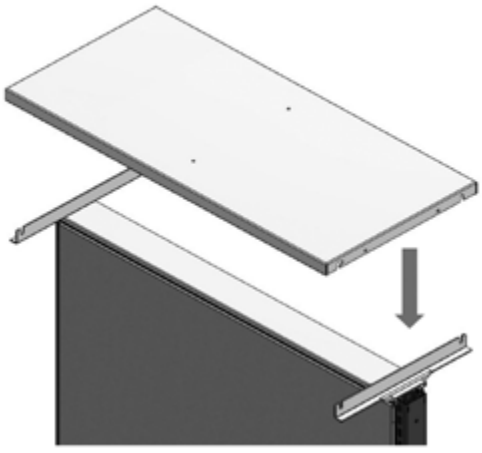

2

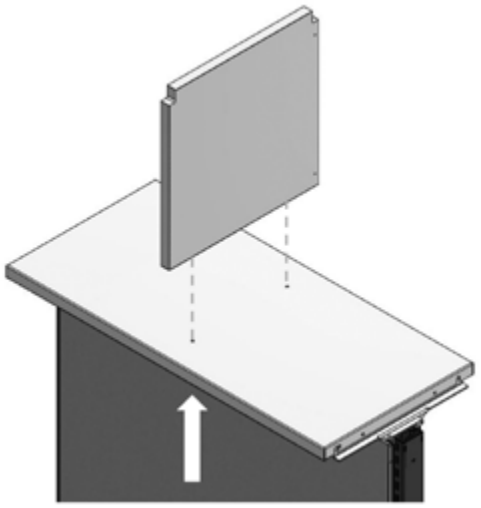

3

INSTALLATION GUIDELINES

4

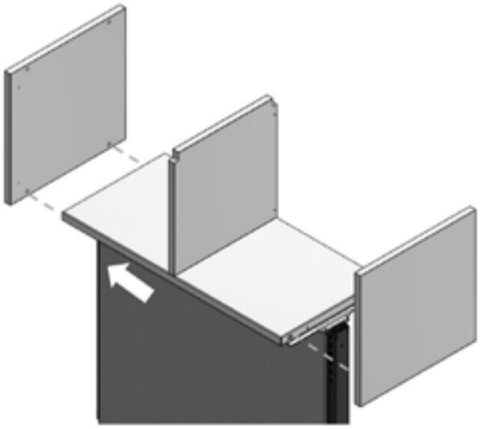

5

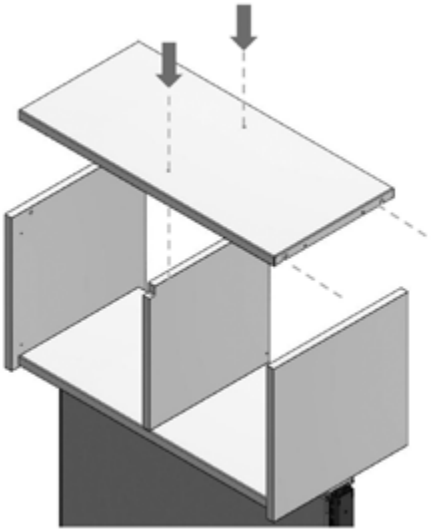

6

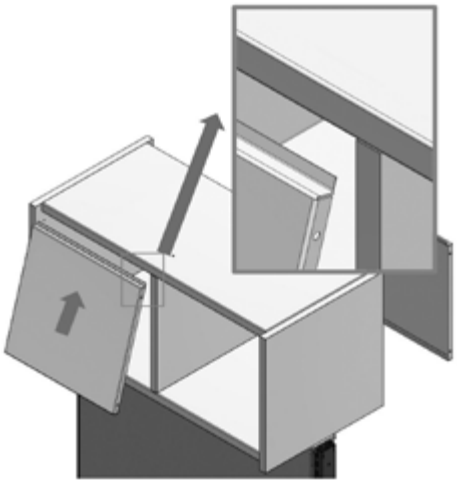

7

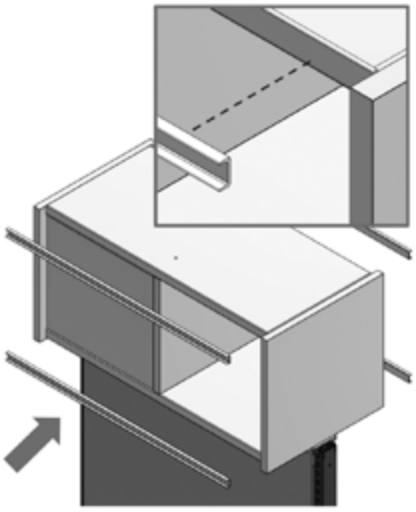

8

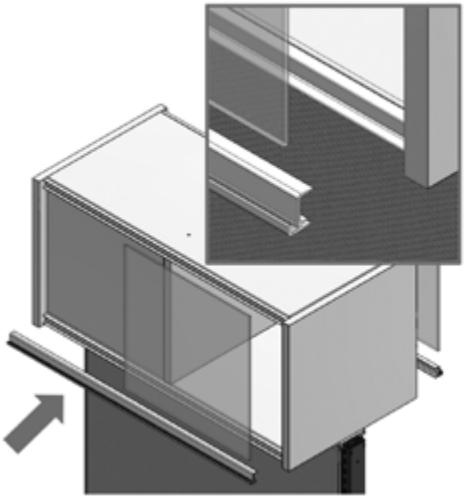

9

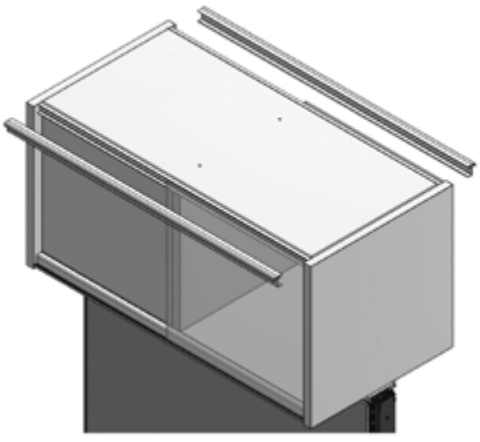

Panel Mounted Overhead Storage Unit - ADA Compliant

Parts List
1 Overhead Storage Unit

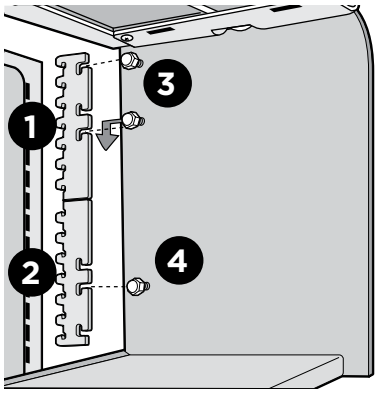

Begin by ensuring that the panel is leveled and properly supported to prevent twisting.

STEP 1:Insert top brackets with teeth facing down into panel slots. Tap down if necessary until the bracket is completely engaged. Note that the teeth are offset. Ensure that, if properly installed, the off- set brings both brackets closer to the centre of the panel.

STEP 2: Insert the second pair of brackets with teeth facing up. Remove internal covers by pushing two tabs (protruding through the bottom shelf) up, then moving the bottom of the internal cover away from the side wall.

STEP 3: Hang the unit carefully onto the brackets as illustrated,while ensuring that the threaded pins welded to the sides are firmly resting in bracket slots.

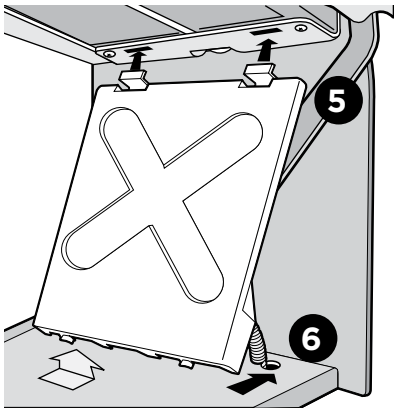

STEP 4: Secure the brackets by tightening the six acorn nuts. Check closing and opening door function as well as the door lock. Make adjustments if necessary(see the following pages for instructions how to fine tune door mechanism functions).

STEP 5: Install inner covers by inserting their top, flexible tabs into slots in the upper section of both sides. Note: the covers are not handed.

STEP 6: Bring the bottom of the cover closer to the unit's side wall. Gently push until the cover's bottom tabs "click" into two slots in the shelf.

Check functionality of the door; make sure that the internal door mech- anism arm is not rubbing cover's sides. make adjustment if necessary.

Up-Mount Overhead Storage Unit - ADA Compliant

Parts List
1 Overhead Storage Unit
1 Set of Up-Mount Cantilevers

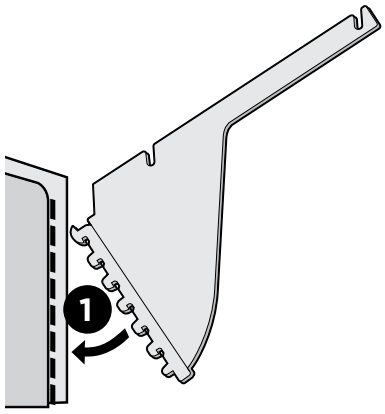

STEP 1: Insert the Up-Mount Cantilever into the top slot on the panel. Note that the teeth are offset. Ensure that the offset brings arms of both installed cantilevers closer to the centre of the panel.

STEP 2: Loosen 4 acorn nuts securing shelf's bottom to the side wall. Important: do not remove the nuts! Only allow for about 0.080" gap.

STEP 3: Bring the unit over the cantilevers and lower it carefully down as illus- trated, while ensuring that the cantilever arms are resting on thread- ed pins, behind all acorn nuts.

STEP 4: Ensure that the whole unit is properly seated, cantilever arms are fully engaged in panel slots and tighten the 4 acorn nuts.

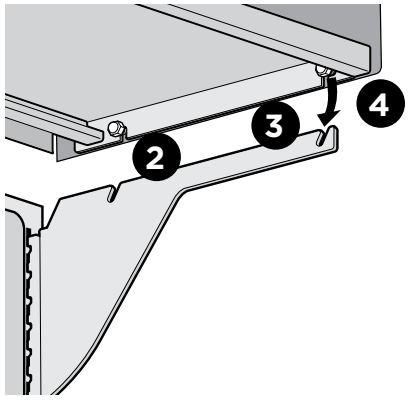

NOTE: In order to comply with ADA, the bottom shelf of the storage unit must not be higher than 50" above the floor.

INSTALLATION GUIDELINES

Up-Mount Conversion Kit

Parts List
1 Back Panel for Overhead
1 Set of Up-Mount Cantilevers

To convert a panel mounted overhead unit into a up-mounted one, begin by removing the unit from the panel. Remove internal covers bypushing two tabs (protruding through the bottom shelf) up, then moving the bot- tom of the internal cover away from the side wall. Loosen acorn nuts securing the unit to panel brackets and disengage it).

STEP 1: Loosen bottom securing acorn nuts (do not remove the nuts! Only allow for about 0.080" gap).

STEP 2: Loosen the front screw securing shelf's top to the sides, remove the rear screw.

STEP 3: Engage lip along the bottom edge of the back panel with the rear lip of the bottom shelf.

STEP 4: Gently lift the back panel (with the back of the bottom shelf). Slide the back over threaded pins welded to the sides while lifting the back of the ceiling panel.

STEP 5: Lower the back of the ceiling panel into channel formed by the back panel.

STEP 6: Tighten screws securing top to the sides.

STEP 7: Secure back and top panels.

STEP 8: Secure back panel to the sides by tightening acorn nuts.

Install Up-Mount Cantilevers on a panel at desired location and proceed as described in section "Up-Mounted Overhead Installation".

NOTE: In order to comply with ADA, the bottom shelf of the storage unit must not be higher than 50" above the floor.

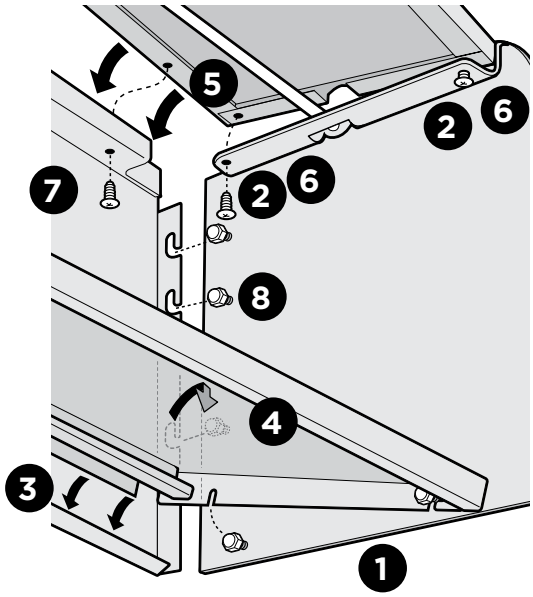

Fine Tuning of Panel Mounted Overhead Storage Unit - ADA Compliant

The overhead storage units are factory assembled and inspected. Tension of the door mechanism is adjusted in accordance with the size and the weight of the door.

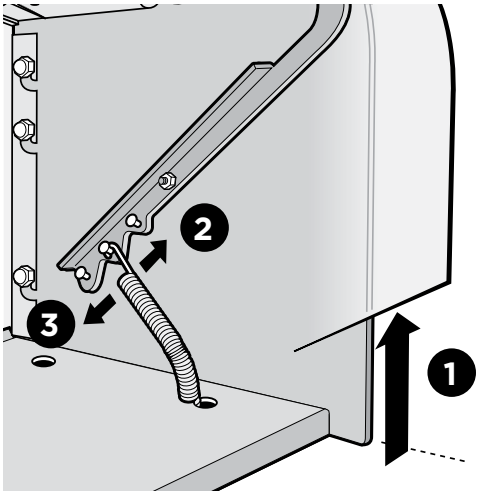

STEP 1: Properly adjust door mechanism will take over the door and lift it as soon as the door bottom is moved about 3 1/2 to 4" above the bottom of the shelf. Should there be the need to fine tune the door mechanism, proceed as follows:
Ensure that the panel is leveled,m square and properly supported to prevent twisting. Check that the unit is properly installed and the assembly is square on the panel. Remove internal civers by pushing two tabs (protruding through the bottom shelf) up, then moving the bottom of the internal cover away from the side wall.

STEP 2: To reduce tension, move springs on both sides of the unit onto the next pin, closer to the central pivot point of the door arm.

STEP 3: Similarly, to increase the tension move springs on both sides of the unit onto the next pin, farther away from the central pivot point of the door arm.

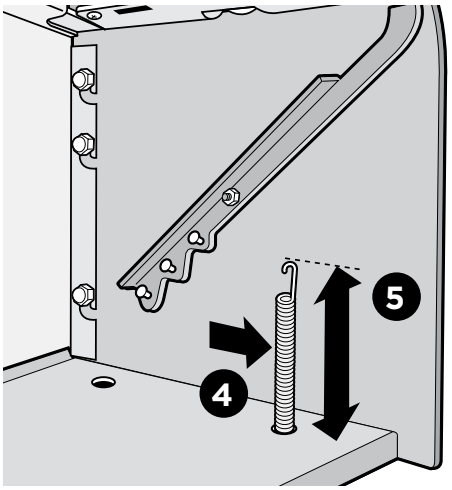

STEP 4: Further adjustments may be done by disengaging springs from the arm, sliding them forward into the larger opening in the shelf and by reinserting the spring again at longer or shorter position, as required.

STEP 5: Set both springs with hooks pointing toward the back of the unit.

STEP 6: Measure the height of each spring to ensure that both are exactly the same length (fine adjustment can be made by turning the springs in or out).

Important: any spring adjustment must be done on both sides of the overhead to prevent the door from twisting and jamming.

Check closing and opening door function as well as door lock. Reinstall the inner covers and ensure that the internal door mechanism arm is not rubbing cover's side.

Open / Close - EVSOP2DOH48-72

Parts List

1 Laminate Overhead case with 2 hinged doors (assembled)
1 Left and 1 Right Metal Bracket
Glass (ships loose, where specified)

The Open / Close configuration combines a closed bay with hinged doors and an open bay.

Sizes: 48" - 72"

Shipping: Hardware, brackets and glass ship lose.

Casegoods: Laminate overhead case is coming assembled .

Special Features: Color of doors and case can be different.

Doors can be configured on site. The closed bay may be set to the left or right side of the unit. See "Hinged Doors - Open / Close Reconfiguration" on page 12.

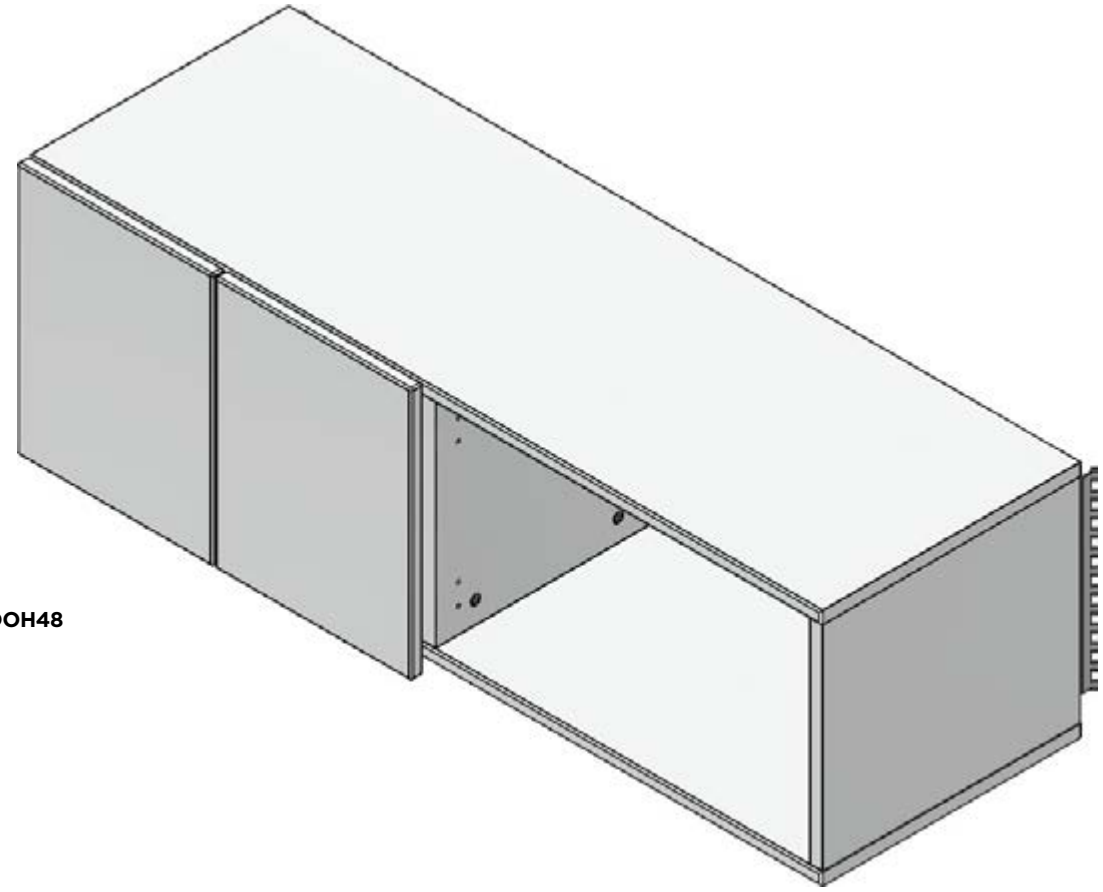

EVSOP2DOH48

Open - EVSOPO24-72

Parts List
1 Laminate Overhead case, open front (assembled)
1 Left and 1 Right Metal Bracket
Screws (packed by Evolve)

Sizes: 24" – 72"

Shipping: Hardware, brackets and glass ship loose.

Casegoods: Laminate overhead case is coming assembled

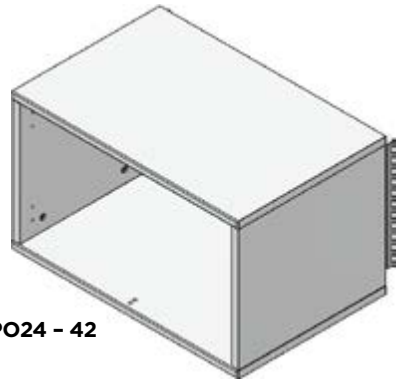

EVSOPO24 – 42

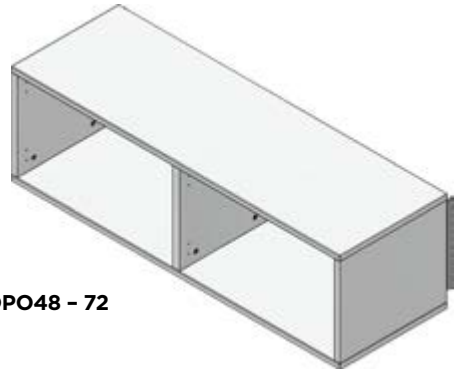

EVSOPO48 – 72

Sliding Glass Door - EVSGDOH24-72

Parts List
1 Laminate Overhead case (assembled)
2 Sliding glass doors, 6mm (ship loose)
1 Left and 1 Right Metal Bracket
Screws (packed by Evolve)

Sizes: 24" – 72"

Shipping: Hardware, brackets and glass ship loose.

Casegoods: Laminate overhead case is coming assembled

A center divider is included on units starting from 48".

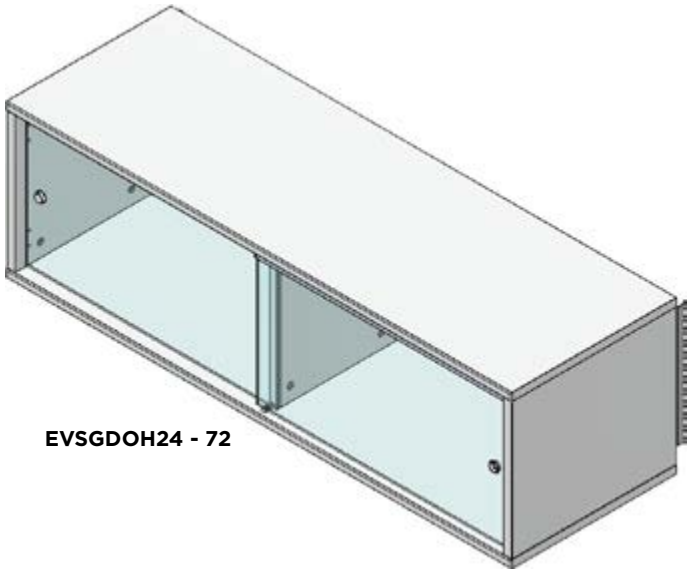

EVSGDOH24 - 72

INSTALLATION GUIDELINES

Panel Mounted Overhead – Centered on Panel

Parts List
1 Laminate Overhead case (assembled)
1 Left Metal Bracket
1 Right Metal Bracket
1 Bottom French Cleat, 1" (taped to back of overhead case)
Bracket screws
Glass / doors as configured (ships loose)

Begin by ensuring that the panel run is installed, levelled and properly supported to prevent twisting. Two installers are recommended to lift and position the overhead.

STEP 1: Unpack the overhead and confirm the configuration code, size and Pick List contents. Identify the Left and Right metal brackets.

STEP 2: Measure the panel and mark the center line. Position the overhead so it is centered on the panel; the brackets will engage the panel slots at each end of the panel.

STEP 3: Insert the upper hook of the metal bracket into the panel slot and pull downward to engage. Tap with a rubber mallet to ensure a structurally sound connection. Ensure the brackets are on the inner side of each slot, to allow room for additional storage brackets in the same slot, if needed.

STEP 4: Repeat for the opposite bracket at the same slot height. Check with a level that both brackets are at the same height.

STEP 5: Center the large French cleat board onto the metal brackets, with the 45-degree cut towards the panel.

STEP 6: Insert two screws into the bottom flange of the bracket, through the grooved in the bottom of the French cleat.

STEP 7: Remove the assembly with the French cleat attached to the metal brackets and secure screws into the back of the metal brackets for all exposed holes covering the French cleat.

STEP 8: Reinstall entire French cleat assembly to panel, locking the metal brackets securely into the slots.

STEP 9: With two installers, lift the laminate case and position it onto the panel at the desired height.

STEP 10: Confirm the case is seated and level. Secure using the supplied French Cleat screws.

STEP 11: Install the glass or adjust doors as required (**see page 12**). Check the unit is level.

1

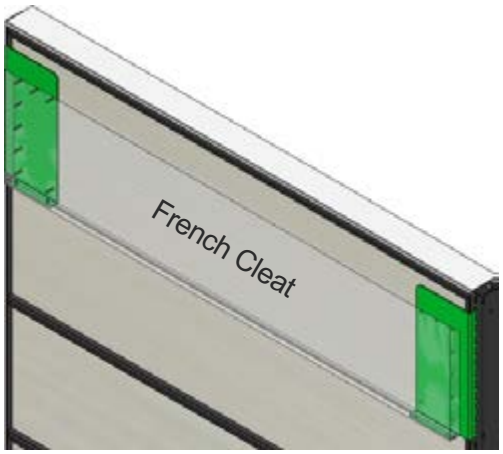

2

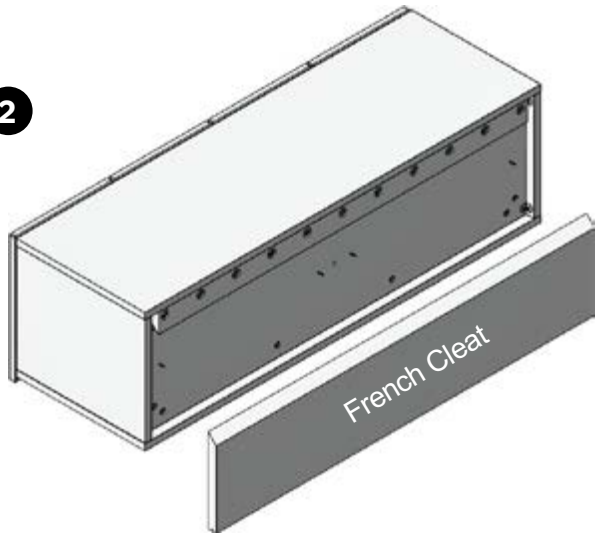

3

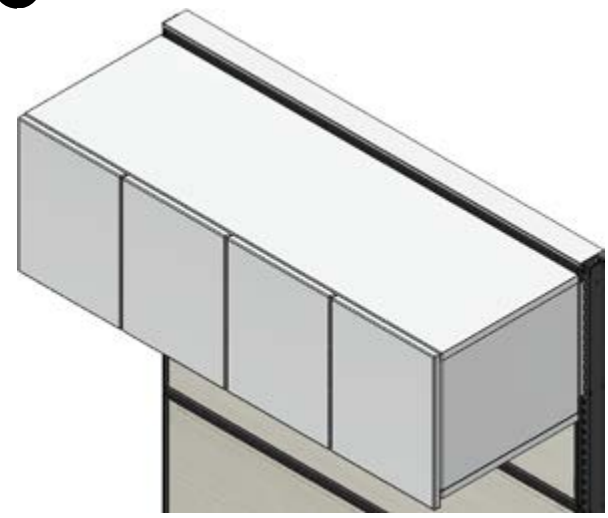

Panel Mounted Overhead – Off-Module on Panel

Parts List
1 Laminate Overhead case (assembled)
1 Left Metal Bracket
1 Right Metal Bracket
1 Bottom French Cleat, 1" (taped to back of overhead case)
Bracket screws (packed by Evolve)
Glass / doors as configured (ships loose)

An off-centered overhead extends past the bracket on one side and overhangs the adjacent panel. Follow the Centered-on Panel procedure with the changes below.

18" MAXIMUM OVERHANG. The overhead must not extend more than 18" beyond the bracket. Exceeding this dimension may affect stability and will void the warranty.

STEP 1: Unpack the overhead and confirm the configuration code, size and Pick List contents. Identify the Left and Right metal brackets.

STEP 2: Measure the panel and mark the center line. Position the overhead so it is centered on the panel; the brackets will engage the panel slots at each end of the panel.

STEP 3: Insert the upper hook of the metal bracket into the panel slot and pull downward to engage. Tap with a rubber mallet to ensure a structurally sound connection. Ensure the brackets are on the inner side of each slot, to allow room for additional storage brackets in the same slot, if needed.

STEP 4: Repeat for the opposite bracket at the same slot height. Check with a level that both brackets are at the same height.

STEP 5: Center the large French cleat board onto the metal brackets, with the 45-degree cut towards the panel.

STEP 6: Insert two screws into the bottom flange of the bracket, through the grooved in the bottom of the French cleat.

STEP 7: Remove the assembly with the French cleat attached to the metal brackets and secure screws into the back of the metal brackets for all exposed holes covering the French cleat.

STEP 8: Reinstall entire French cleat assembly to panel, locking the metal brackets securely into the slots.

STEP 9: With two installers, lift the laminate case and position it onto the panel at the desired height.

STEP 10: Confirm the case is seated and level. Secure using the supplied French Cleat screws.

STEP 11: Install the glass or adjust doors as required (see page 12). Check the unit is level.

1

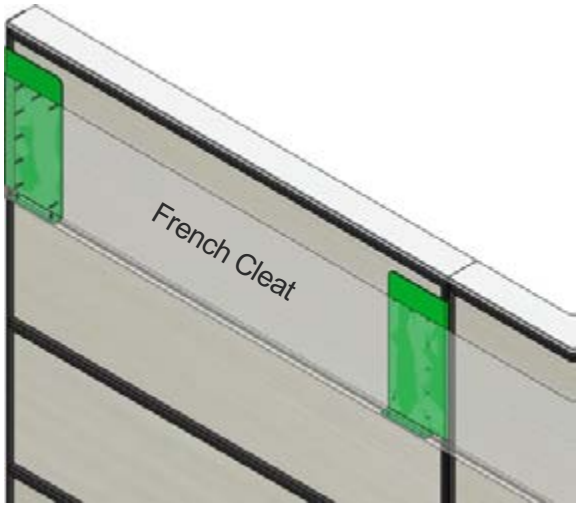

2

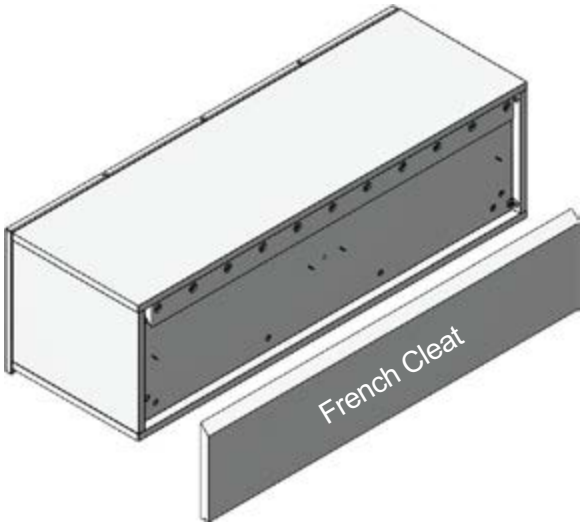

3

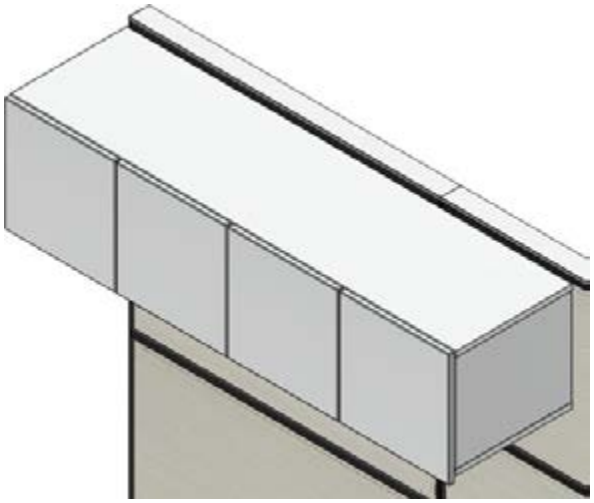

18" max. overhang

INSTALLATION GUIDELINES

Wall Mounted Overhead – French Cleat

Parts List
1 Laminate Overhead case (assembled)
1 Bottom French Cleat, 1”
French Cleat screws
Wall anchors / fasteners (supplied by installer)

Wall mounted overheads hang on a 1” French Cleat fastened to the wall. Confirm the wall construction can support the overhead and its contents before installation.

STEP 1: Determine the mounting height and mark a level line on the wall for the top edge of the Bottom French Cleat.

STEP 2: Locate the wall studs or blocking along the line using a stud finder.

STEP 3: Hold the Bottom French Cleat to the line with the bevel facing up and toward the wall. Check with a 48” level.

STEP 4: Fasten the cleat to the wall at each stud or blocking location using fasteners suitable for the wall construction.

STEP 5: With two installers, lift the overhead and lower it so the mating cleat on the back of the case engages fully over the wall cleat.

STEP 6: Confirm the case is seated and level. Secure using the supplied French Cleat screws.

STEP 7: Install the glass or adjust doors as required (**see page 12**). Check the unit is level.

Do not hang the overhead on drywall anchors alone. Fasten into studs or solid blocking.

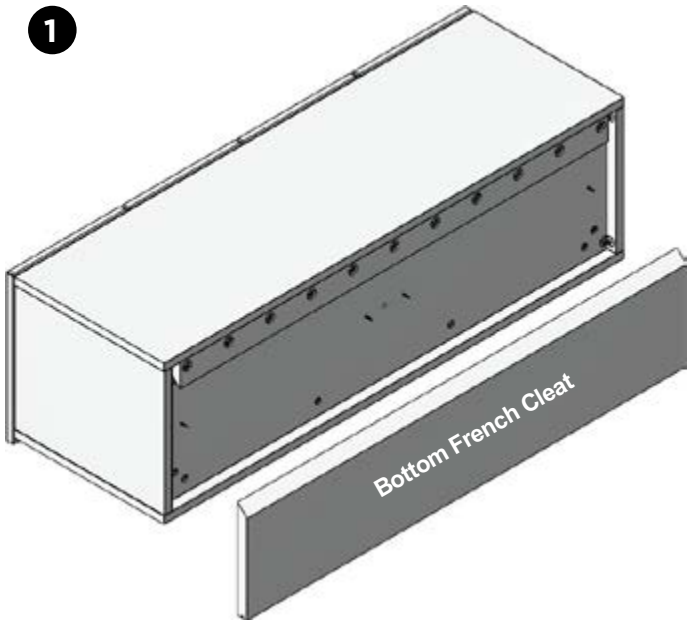

Sliding Glass Door Installation – EVSGDOH

Parts List
2 Sliding glass doors, 6mm thick (ship loose)
Glass hardware

Install glass only after the overhead is mounted, secured and level. Wear gloves and safety glasses.

STEP 1: Unpack the glass and inspect the polished edges and dubbed corners for chips or damage. Confirm finish (Double Sided Writable or Acid Frosted) and orient the glass accordingly.

STEP 2: Starting with the rear door, lift the glass up into the top track of the case, then swing the bottom in and lower it into the rear bottom track.

STEP 3: Repeat with the front door in the front tracks.

STEP 4: Slide both doors fully open and closed to confirm smooth operation. On units 48" and larger, check that doors clear the center divider.

1

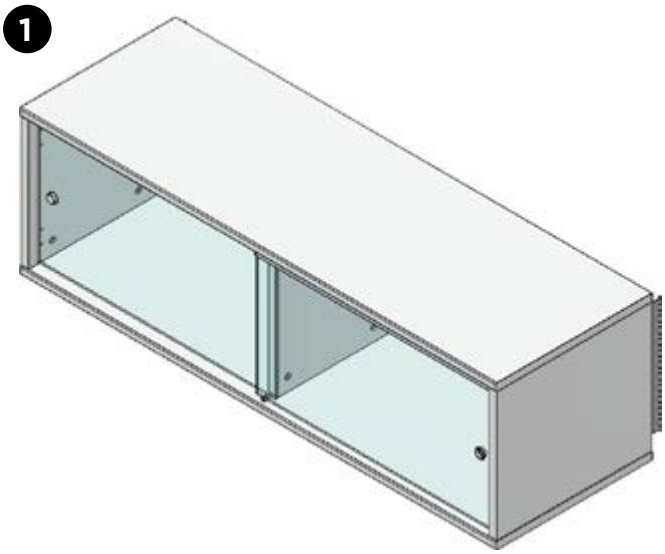

Hinged Doors – Adjustment and Open / Close Reconfiguration

Hinged doors arrive mounted on the assembled case. On the Open / Close configuration (EVSOP2DOH) the doors can be moved to the opposite bay on site.

STEP 1: To reconfigure, open the doors fully and release each hinge from its mounting plate. Set the doors aside on a padded surface.

STEP 2: Transfer the hinge mounting plates to the matching locations in the opposite bay.

STEP 3: Reattach the doors by engaging each hinge onto its mounting plate until it clicks.

STEP 4: Adjust the hinges so door gaps are even and doors close flush. Repeat on all doors (EVS4DOH).

2

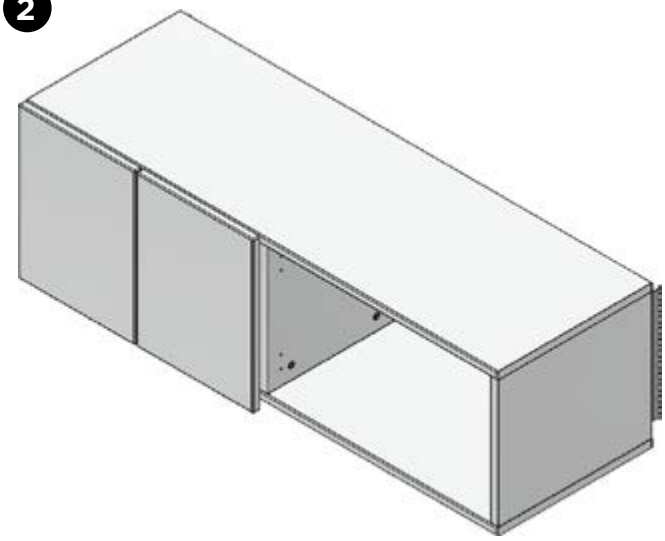

INSTALLATION GUIDELINES

Final Inspection

- ☐ Configuration code and size match the order (EVS4DOH, EVSOP2DOH, EVSOPO or EVSGDOH).
- ☐ Left and Right metal brackets are fully engaged in the panel slots and all bracket screws are installed.
- ☐ Off-centered units do not overhang more than 18” beyond the bracket.
- ☐ Wall mounted units are fully seated on the French Cleat and the cleat is fastened into studs or blocking.
- ☐ Unit is level side to side and front to back.
- ☐ Sliding glass doors run smoothly; glass edges are free of chips.
- ☐ Hinged doors open and close freely with even gaps.
- ☐ All packaging, loose hardware and debris have been removed from the work area.

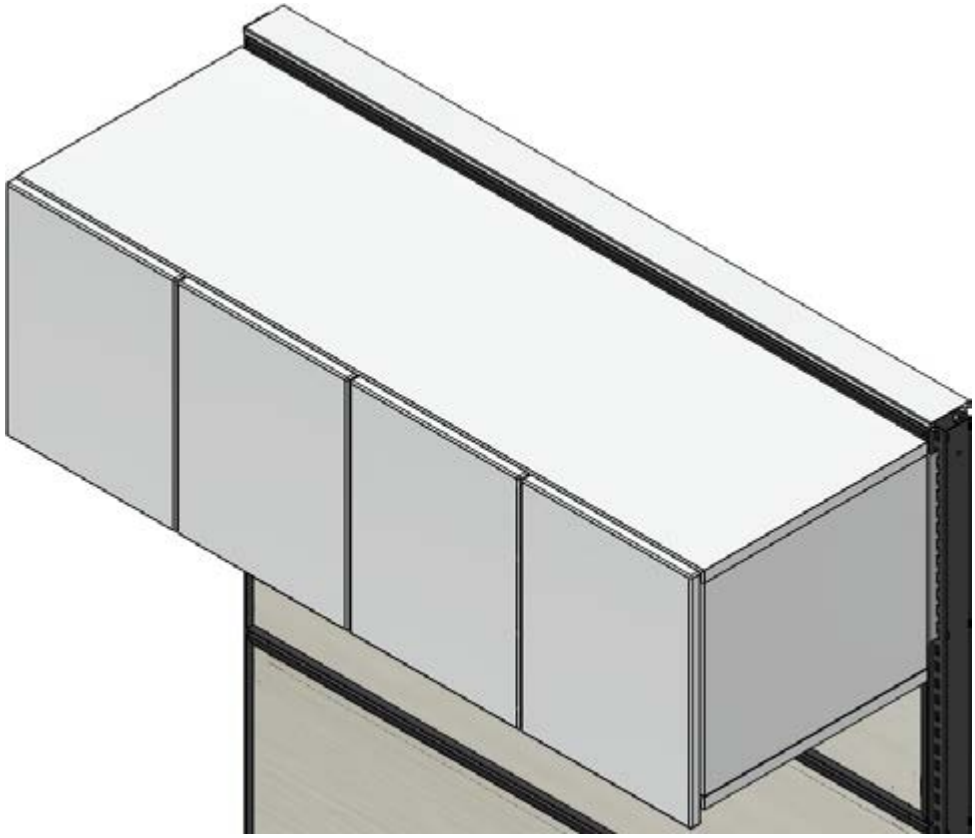

Off Module Worksurface Bracket

STEP 1: Prior to installing the Off-Module Worksurface Bracket (EVHOMB1), install adjoining worksurface at normal height from the floor (23 slots up from the bottom of the connector post).

STEP 2: Install the Load Bar, purchased separately, at the same height (23rd slot) as the neighboring worksurface support bracket.

STEP 3: Disengage the Load Bar from the bracket closest to the corner and slide it back from the corner approx 2" to 3".

STEP 4: Insert the corner bracket at the same slot height in the opposite side of the corner post.

STEP 5: Reengage the Load Bar.

STEP 6: Hook the off-module bracket into the Load Bar and allow it to temporarily hang down.

STEP 7: Place the worksurface on the cantilever and the corner bracket and loosely insert bolts into the worksurface through these brackets.

STEP 8: Slide the off-module bracket into place and secure it into the insert at the front of the worksurface.

STEP 9: Tighten all bolts.

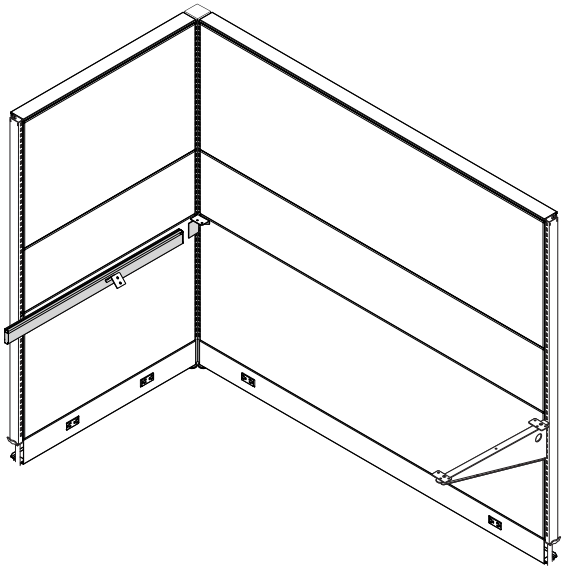

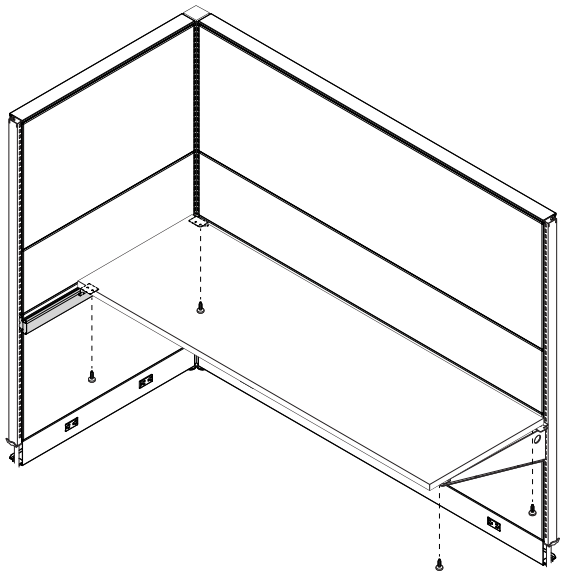

INSTALLATION GUIDELINES

Lock Clip Installation

Lock Clip can be installed in any slot (except very top) occupied by most of our brackets.

STEP 1: Place the lock clip in such a way that short part is toward the bracket.

STEP 2: Squeeze the lock clip with fingers.

STEP 3: Push the Lock Clip into top part of the slot until the clip clicks.

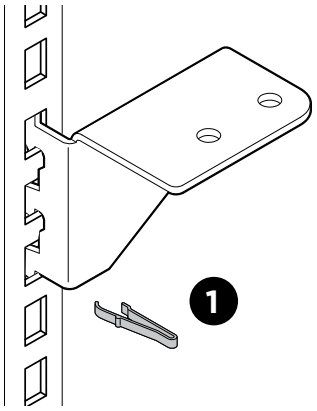

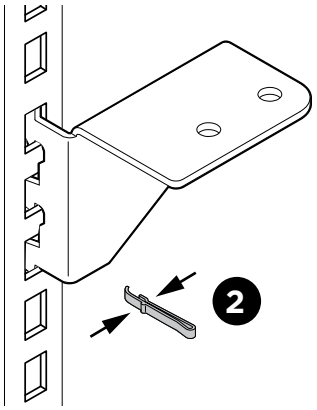

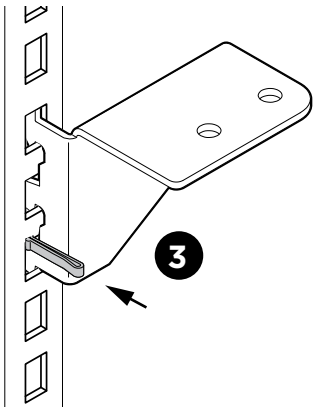

Pass Thru Sliding Door

Lock Clip can be installed in any slot (except very top) occupied by most of our brackets.

STEP 1: Install vertical Pass Thru Trim

STEP 2: Install PVC Track at bottom and put both Glass at angle, put top PVC track on top of glass as shown.

STEP 3: Tilt Glass to vertical position so PVC track is under the frames top.

STEP 4: Push up the top PVC track to snap in the frame groove as shown.

STEP 5: Slide glass to one side and finish installing top PVC track.

STEP 6: Install metal handles.

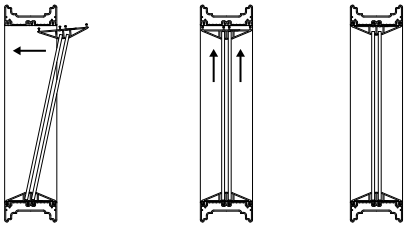

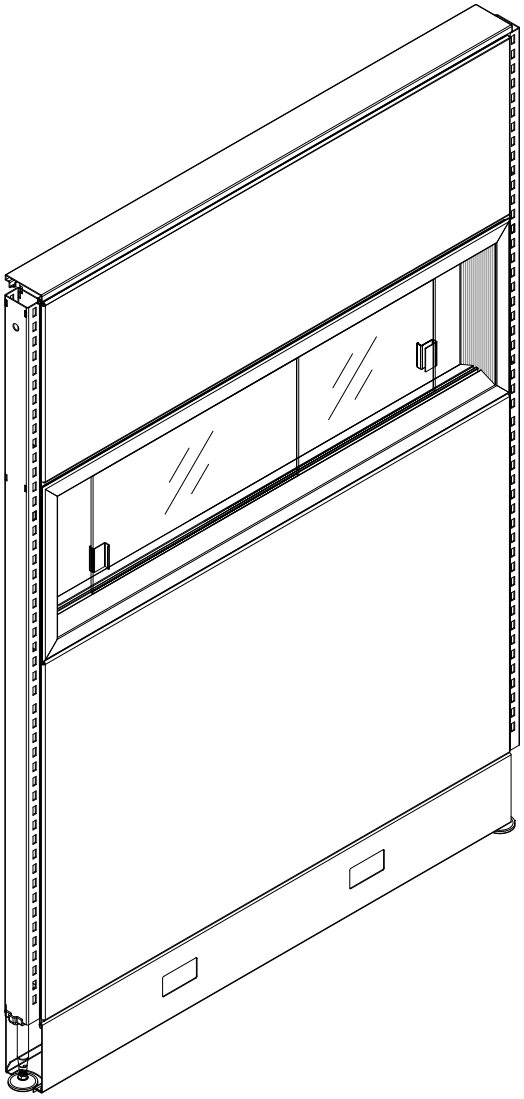

Sliding Door Metal Handle

STEP 7: Peel off the protective paper from the rubber.

STEP 8: Attach sticky side of rubber to glass.

STEP 9: Slide the metal handle if necessary

STEP 10: Install the other metal handles.

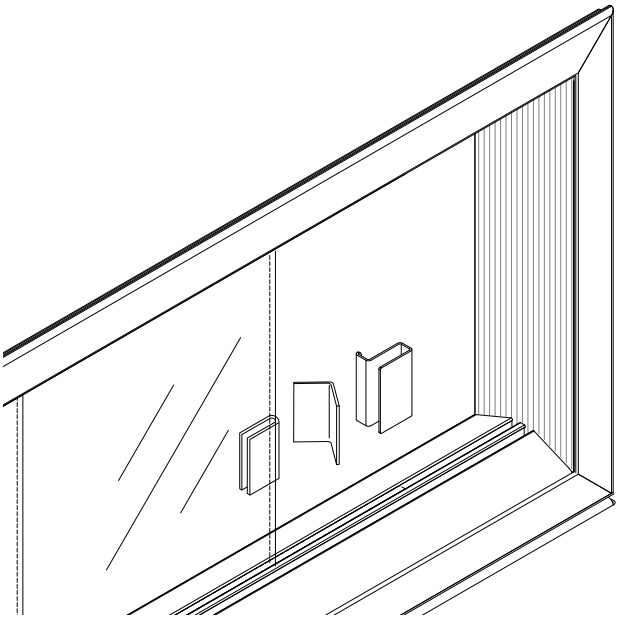

INSTALLATION GUIDELINES

Name Plate

STEP 1: Insert a paperclip into the opening along the edge of the frame as illustrated.

STEP 2: Push the paperclip toward centre and lift the transparent screen.
Place name card into the frame and replace the screen.

STEP 3: Carefully loosen the two screws holding the brackets. Ensure that the brackets do not come apart.

STEP 4: Insert steel bracket of the Name Plate into panel's slots and engage by pressing it down.

STEP 5: Tighten the bracket with two screws. Do not overtighten.

STEP 6: Adjust the frame to desired position (parallel or perpendicular to panel surface).

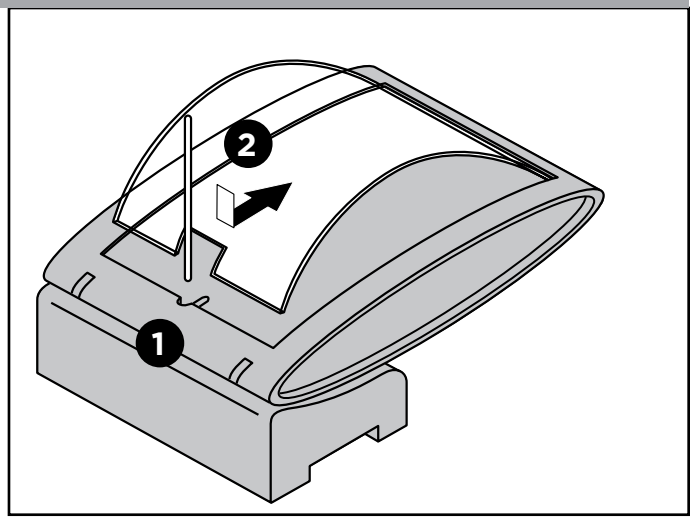

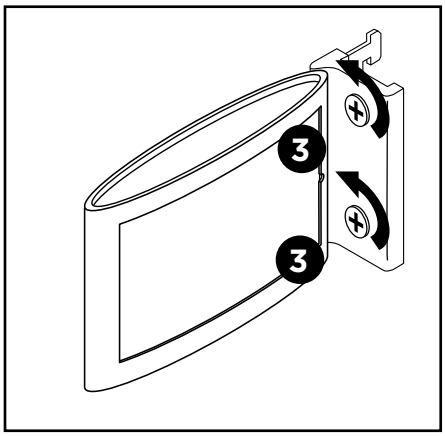

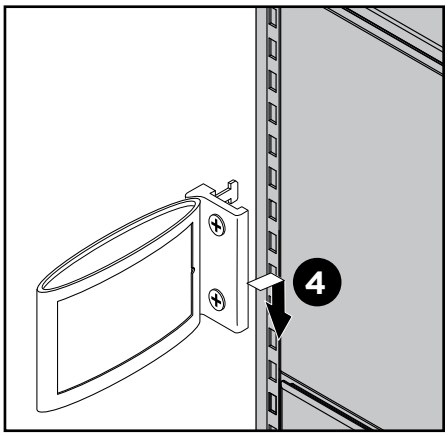

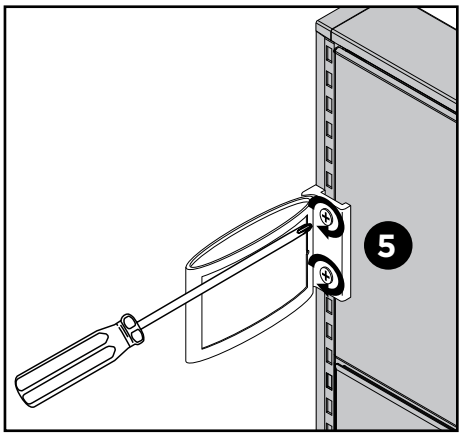

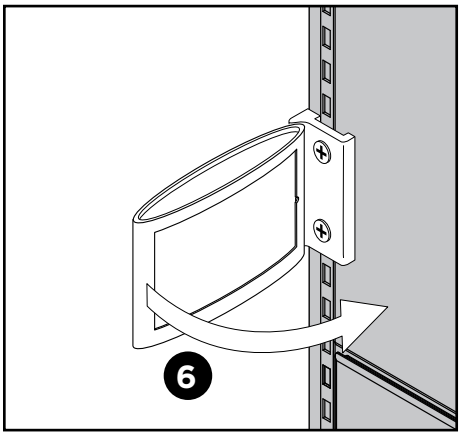

Accessory Retainer

STEP 1: Mount the accessory on the load bar.

STEP 2: Push the accessory retainer (1) into the gap above the accessory (2) to lock it into place.

3” black rubber retainer for use with paper management accessories.
This locks and prevents accessories from falling off the load bar.

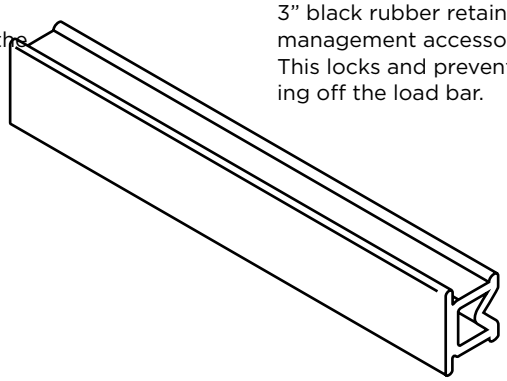

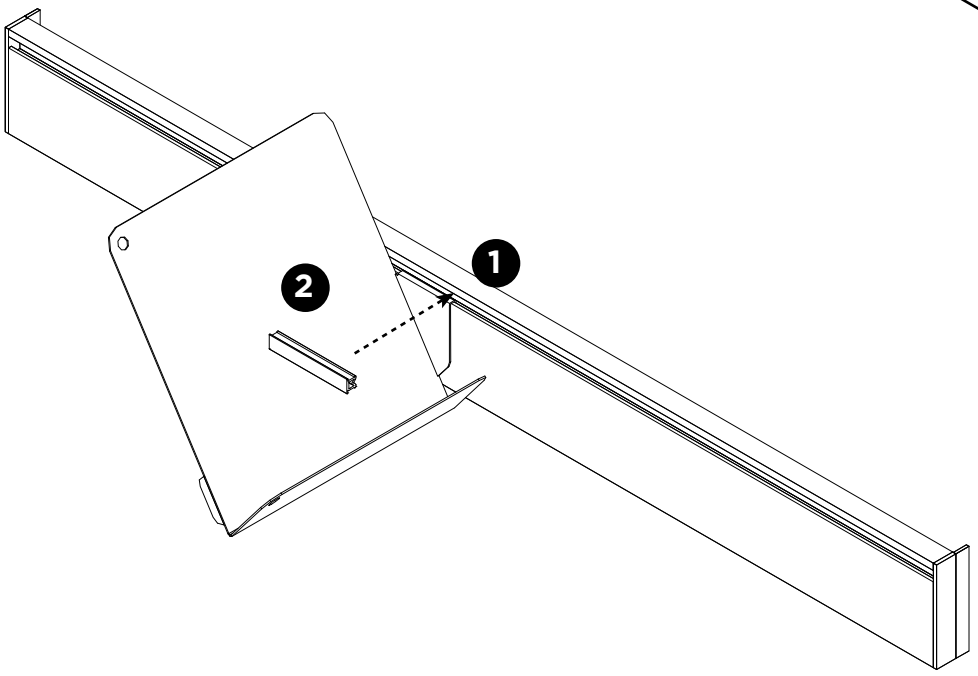

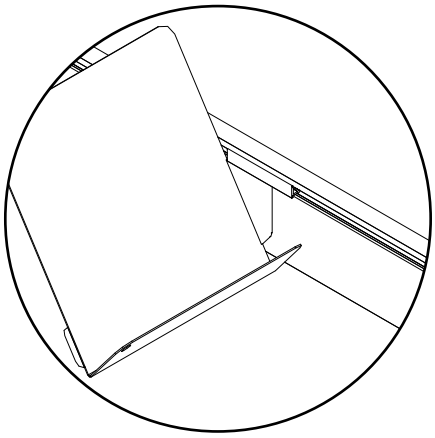

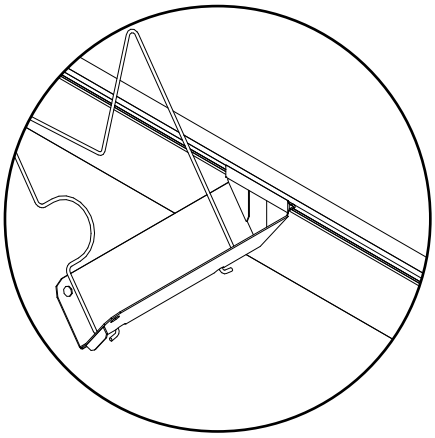

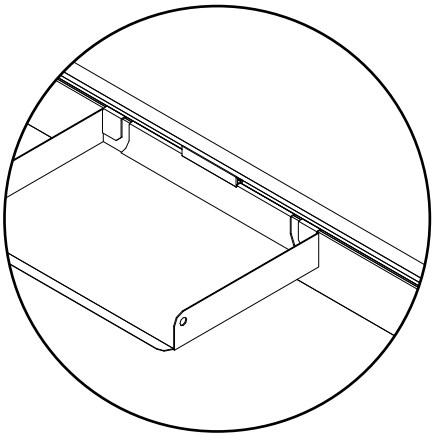

INSTALLATION GUIDELINES

Acoustic Grid

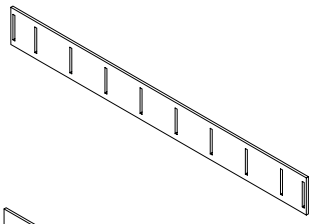

PET05##S
Acoustic Grid Inner Left and Right Slat
Width varies depending size of station
5-1/2" High

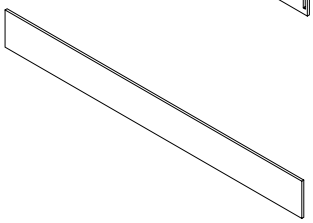

PET05##OF
Acoustic Grid Outer front and Back Skirt
Width varies depending size of station
5-1/2" High

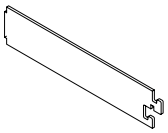

PET05##E
Acoustic Grid End Slat
Width varies depending size of station
5-1/2" High

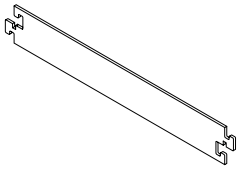

PET05##C
Acoustic Grid Central Slat
Width varies depending size of station
5-1/2" High

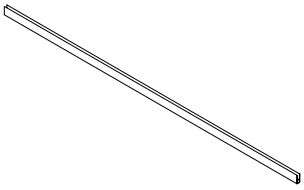

10020070##
Aluminium Extrusion
Width varies depending size of station

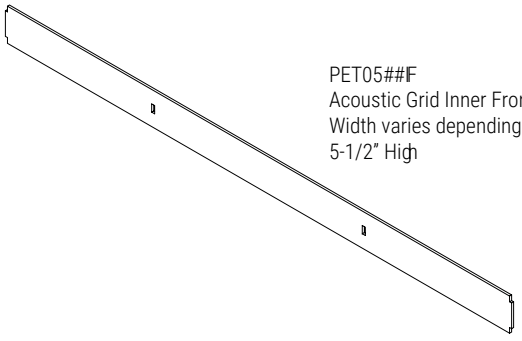

PET05##F
Acoustic Grid Inner Front & Back Slat
Width varies depending size of station
5-1/2" High

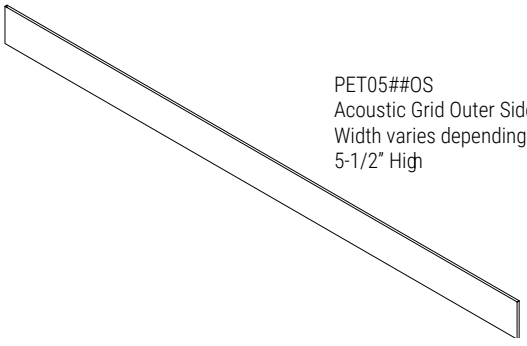

PET05##OS
Acoustic Grid Outer Side Skirt
Width varies depending size of Station
5-1/2" High



PET0303M
Acoustic Grid End Divider
3-3/4" Width
2-3/4" High



PET0306M
Acoustic Grid Middle Divider
5-5/8" Width
2-3/4" High



000101136PB
Flat Head Screw
#8 x 1"



Safety Bracket
x4

Acoustic Grid

STEP 1: Assemble components on the ground

STEP 2: Insert aluminium extrusion into cut-out. Ensure extrusion is flush to front of PET05##IF

STEP 3: Ensure PET0303M is touching the back of PET05##IF then press down to fix PET0303M into extrusion.

STEP 4: Secure PET05##IF by screwing through onto the top edge of PET0303M with a #8 x 1-1/2" screw Ensure F07DV304 is straight.

STEP 5: Repeat steps 2 – 5 on the remaining cut-outs.

STEP 6: Insert PET05##IF into both end slots of PET05##IS.

STEP 6a: Secure PET05##IF by screwing through PET05##IS with a #8 x 1-1/2" screw.

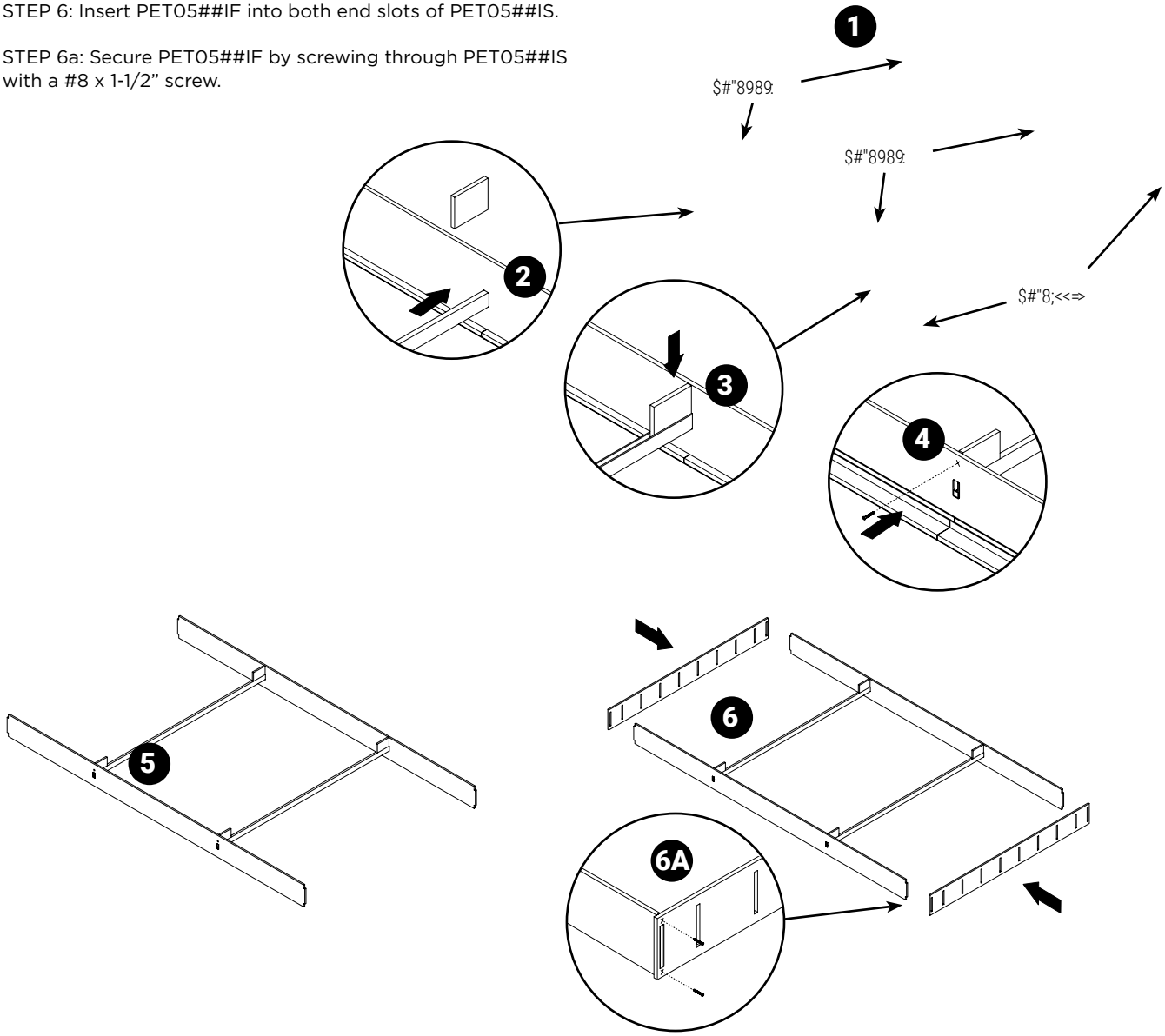

INSTALLATION GUIDELINES

Acoustic Grid

STEP 7A: Insert the provided safety brackets into the channel of the top trim. Four safety brackets will be shipped as standard, but for assemblies larger than 10' x12', eight will be sent, making sure the outer skirt sandwiches the bracket between the PET and the aluminum extrusion.

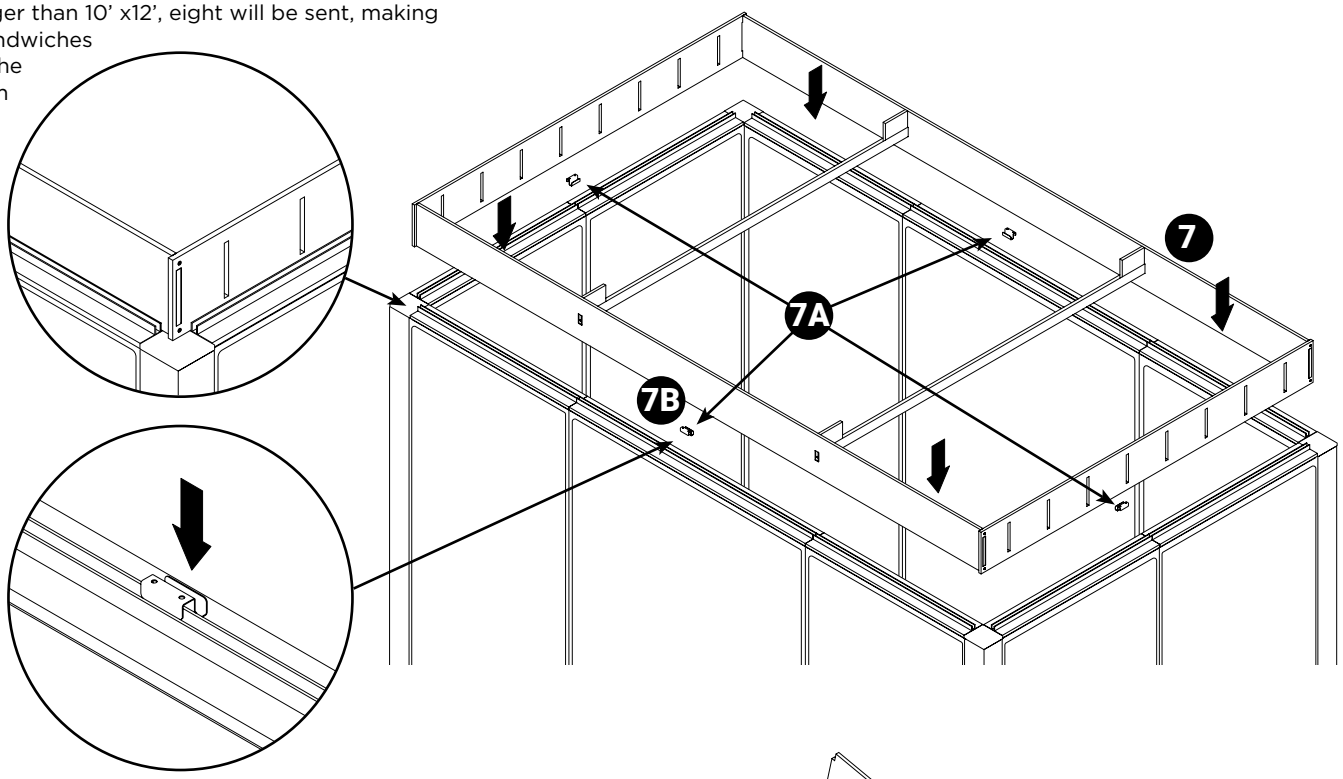

STEP 7B: Drop the assembly onto top trim of the panels (previously installed on site) ensuring the PET feld sits in the channel of the safety bracket. Assembly will sit on the inside of the channel on the top trim and not in the channel.
STEP 8A: Hook F05SM593-E onto extrusion.
STEP 8B: Insert other end into Second slot.

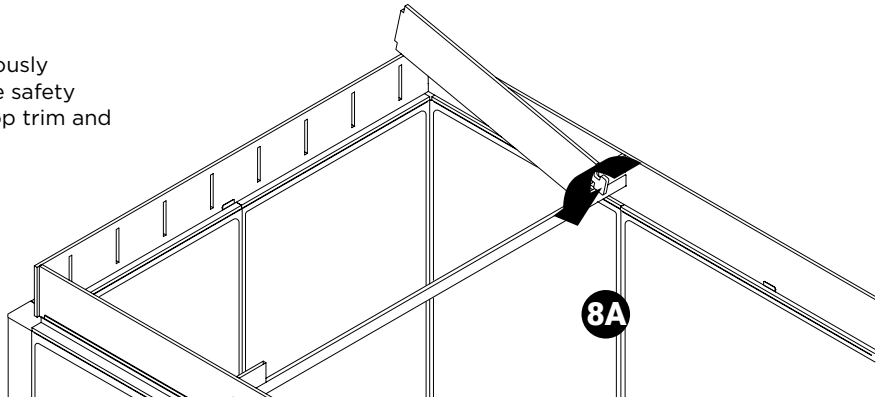

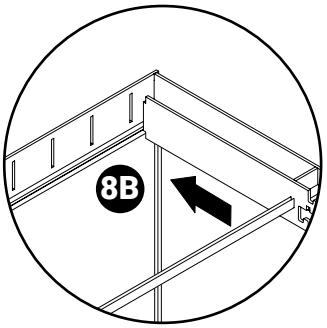

STEP 9: Repeat steps 8 with the remaining slats (PET05##E) on the row.

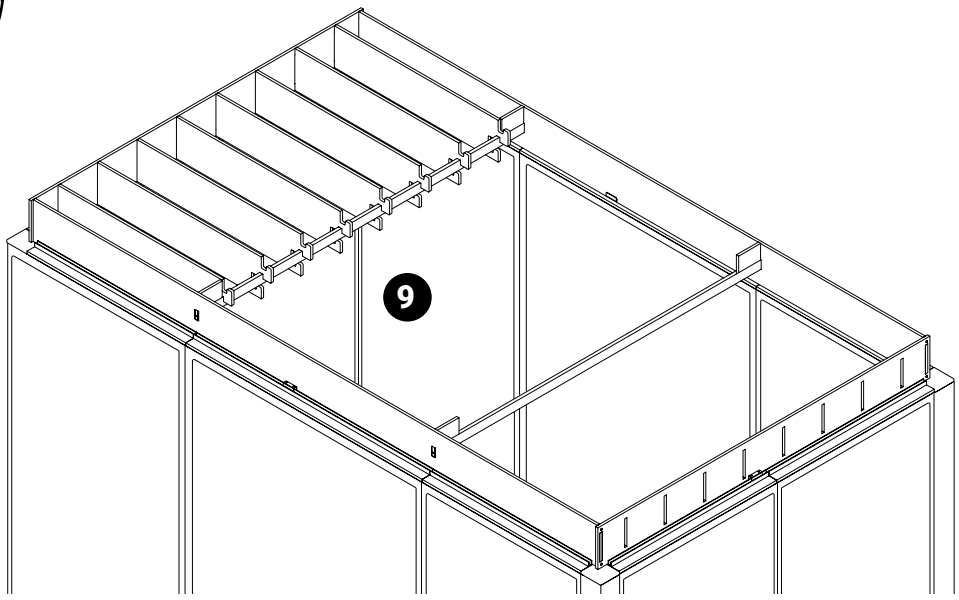

Acoustic Grid

STEP 10: To install centre slat (PET05##C) follow the next steps in order.

STEP 10A: Hook one end onto opposite extrusion.

STEP 10B: Connect the other end with one of the previously installed PET05##E.

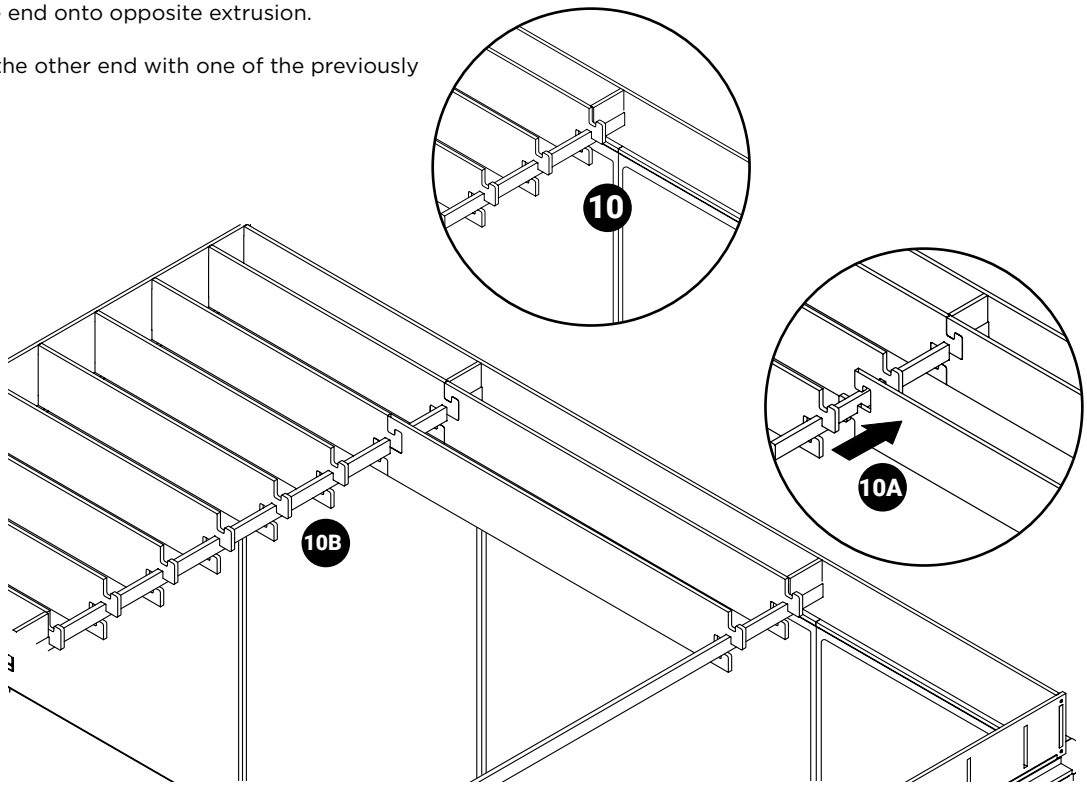

STEP 11: Repeat steps 10A & 10B with the remaining slats (PET05##C) on the row.

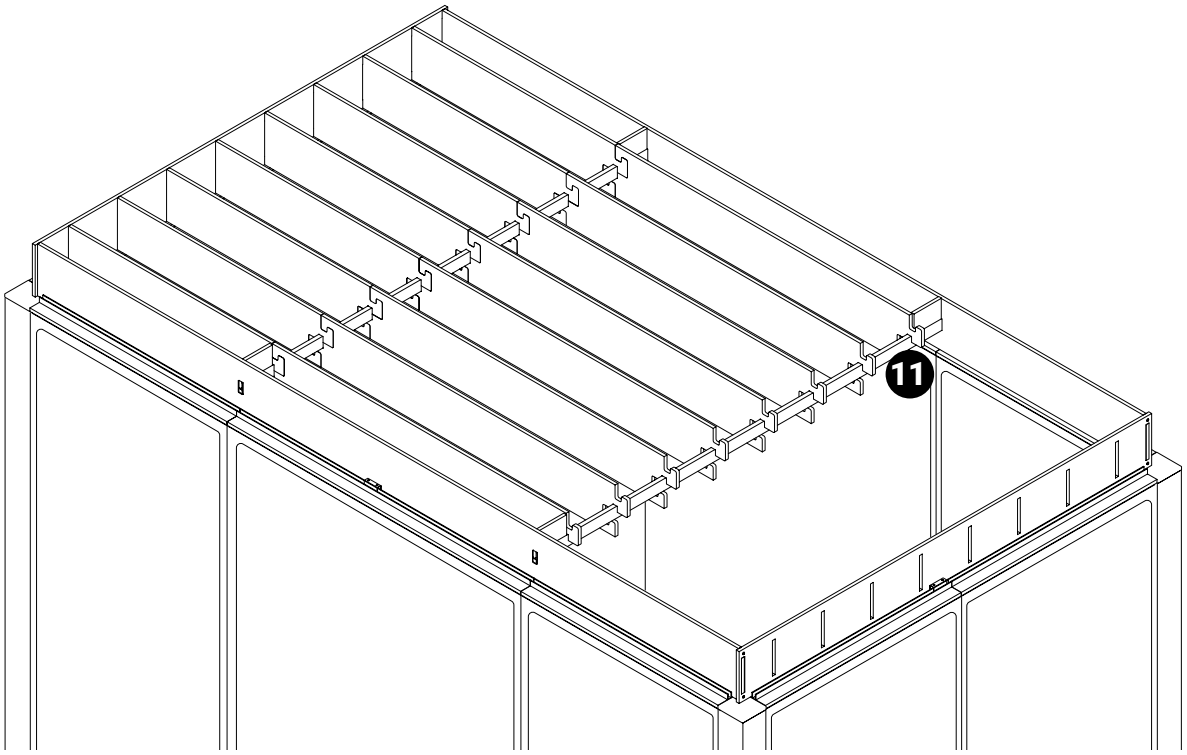

INSTALLATION GUIDELINES

Acoustic Grid

STEP 12: To install other end condition slat (PET05##E) connect one end with previously installed centre slat (PET05##C) and insert other end into a slot on PET05##IS.

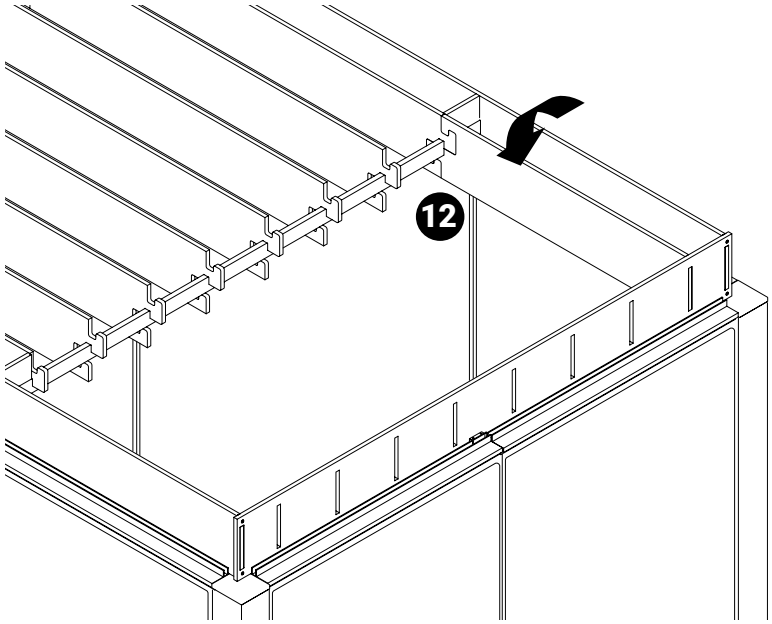

STEP 13: Repeat step 12 with the remaining end slats (PET05##E) on the row.

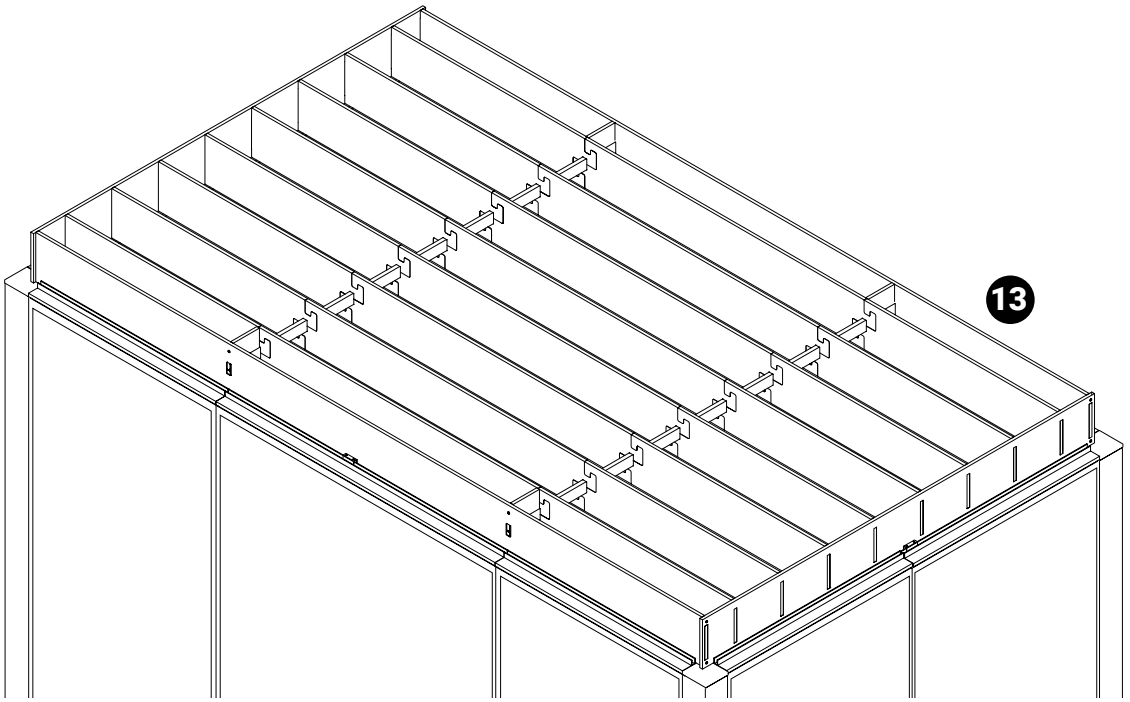

Acoustic Grid

STEP 14: In order to fix and keep slats at the same distance place the wider spacer (PET0306M) in between the slats (PET05##E & PET05##C)

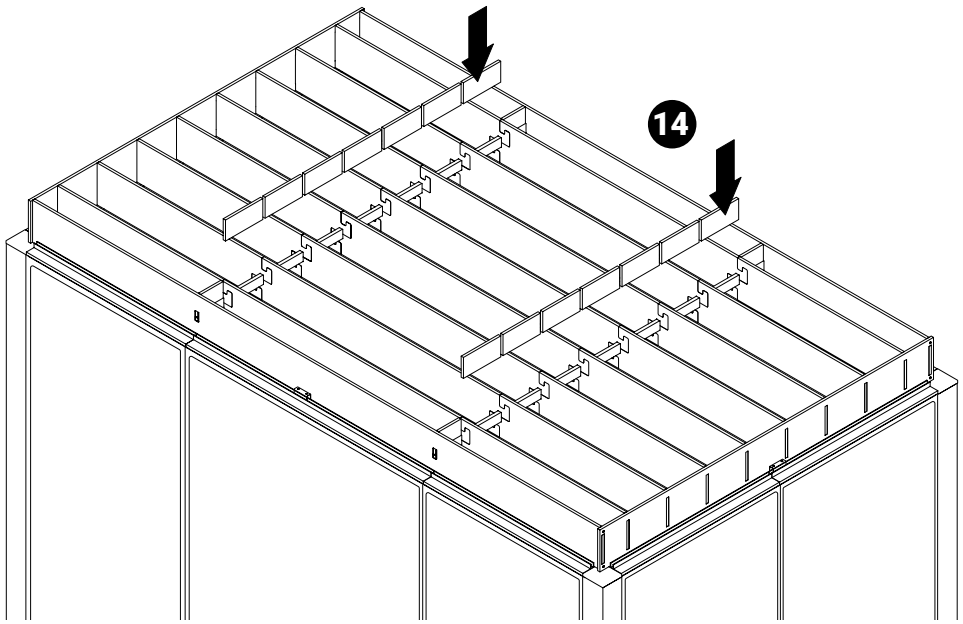

STEP 15: ENSURE slats are straight (PET05##E & PET05##C, Press down PET0306M into the aluminium extrusion
STEP 16: Repeat steps 14, 15a & 15b with the spacers (PET0306M) on the other extrusion

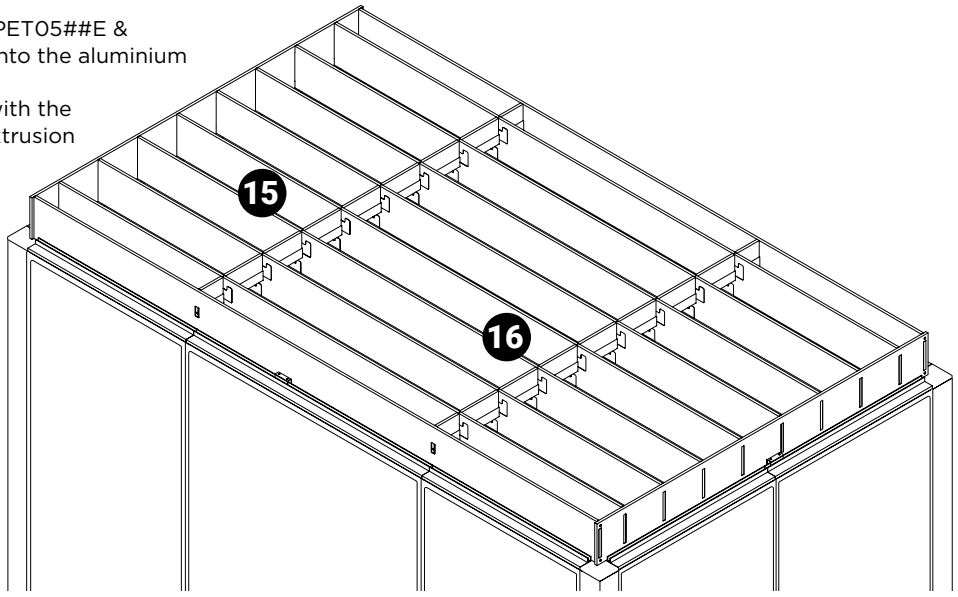

STEP 17: Install left and right skirts (PET05##OS) into the side top trims.

INSTALLATION GUIDELINES

Acoustic Grid

STEP 17A: PET05##OS are centred on the panel before pressing them down into the top trim

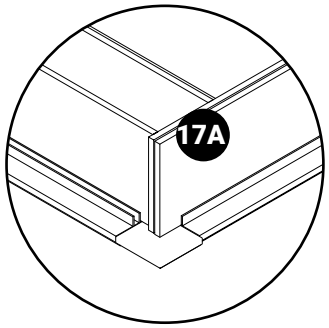

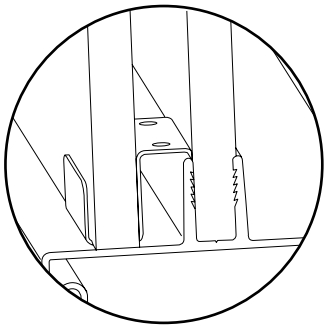

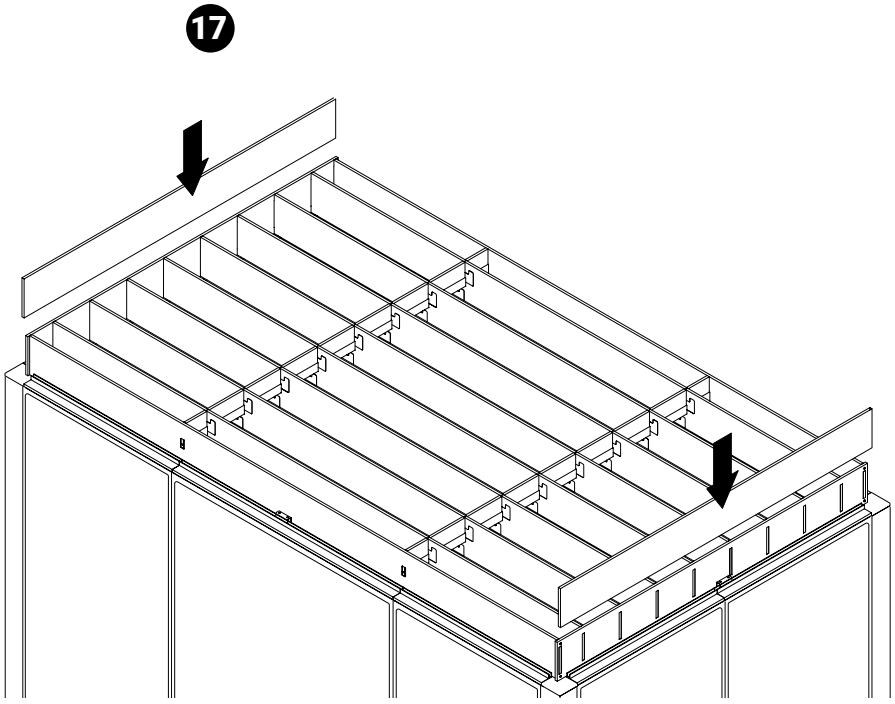

STEP 18: Install front and back skirts (PET05##OF) ENSURE PET05##OF is centred before pressing them down into the top trim

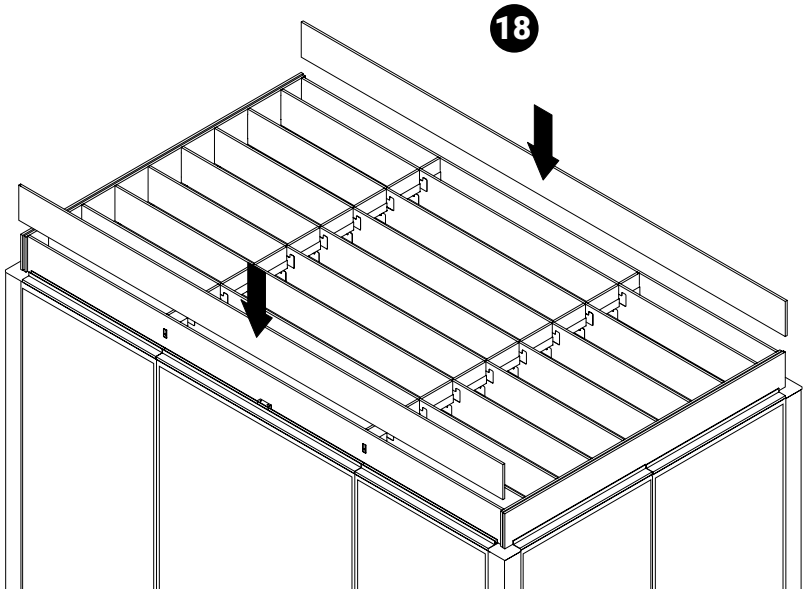

evolve installation guide



Showrooms

Atlanta
10 10th Street
Suite 150
Atlanta, GA 30309
T (404) 879-0998

Boston
One Harbor Street
Suite 104
Boston, MA 02210
T (617) 406-5435

Chicago
1045 W Fulton Street
Chicago, IL 60607
T (312) 755-0843

Irvine
18400 Von Karman Ave.
Suite 100
Irvine, CA 92618

Miami
112 NE 41st Street
6th Floor
Miami, FL 33137

New York City
386 Park Avenue South
7th Floor
New York, NY 10016
T (212) 545-9900

Philadelphia
1735 Market Street
38th Floor
Philadelphia, PA 19103
T (215) 861-0963

New Jersey (Southern)
119 West Greentree Road
Marlton, NJ 08053
T (856) 596-3390

Phoenix
4675 E Cotton Center Blvd.
Suite 165
Phoenix, AZ 85040
T (602) 426-0666
T (602) 426-0777

Washington, DC
1130 Connecticut Avenue
10th Floor, Suite 1000
Washington, DC 20036
T (202) 659-0230
T (202) 659-0236

Distribution Centers

Atlanta Area
6715 Maple Ave.
Suite 100
Buford, GA 30518
T (678) 602-4130

Baltimore Area
Troy Hill
Corporate Center
7030 Troy Hill Drive
Elkridge, MD 21075
T (410) 379-8021

Chicago Area
27W501 North Ave.
Suite 300
West Chicago, IL 60185
T (630) 681-2818

Cincinnati Area
8712 LeSaint Drive
Fairfield, OH 45014
T (513) 777-0009

Dallas Area
2025 West Beltline Road
#100
Carrollton, TX 75006
T (972) 236-1366

Denver Area
19080 E. 38th Ave.
Unit #30
Aurora, CO 80011
T (303) 340-1617

Ft. Lauderdale Area
560 Sawgrass
Corporate Pkwy
Sunrise, FL 33325
T (954) 846-8888

Houston Area
7415 Empire Central Dr.
Suite 100
Houston, TX 77040
T (713) 701-1018

Kansas City Area
11617 West 81st Street
Lenexa, KS 66214
T (913) 310-9963

Los Angeles Area
3629 Workman Mill Road
Whittier, CA 90601
T (562) 484-9686

Philadelphia Area
181 Walter A Gaines Way
Suite 200
Lawnside, NJ 08045
T (856) 596-3390

Seattle Area
Oakesdale Commerce Ctr.
820 Southwest 34th Street
Building W7, Suite A
Renton, WA 98057
T (425) 291-9282

Tampa Area
10351 Windhurst Road
Tampa, FL 33619
T (813) 621-6272

Global - USA Headquarters
17 West Stow Road P.O. Box 562
Marlton, New Jersey U.S.A. 08053
Tel (856) 596-3390 (800) 220-1900
Fax (856) 596-5684
www.globalfurnituregroup.com

Global - Canada Headquarters
1350 Flint Road
Downsview, ON Canada M3J 2J7
Sales & Marketing: Tel (1-877) 446-2251
Customer Service: Fax (800) 361-3182
Government Customer Service: Fax (416) 739-6319