Effective June 2026
USA

INSTALLATION MANUAL

open spaces

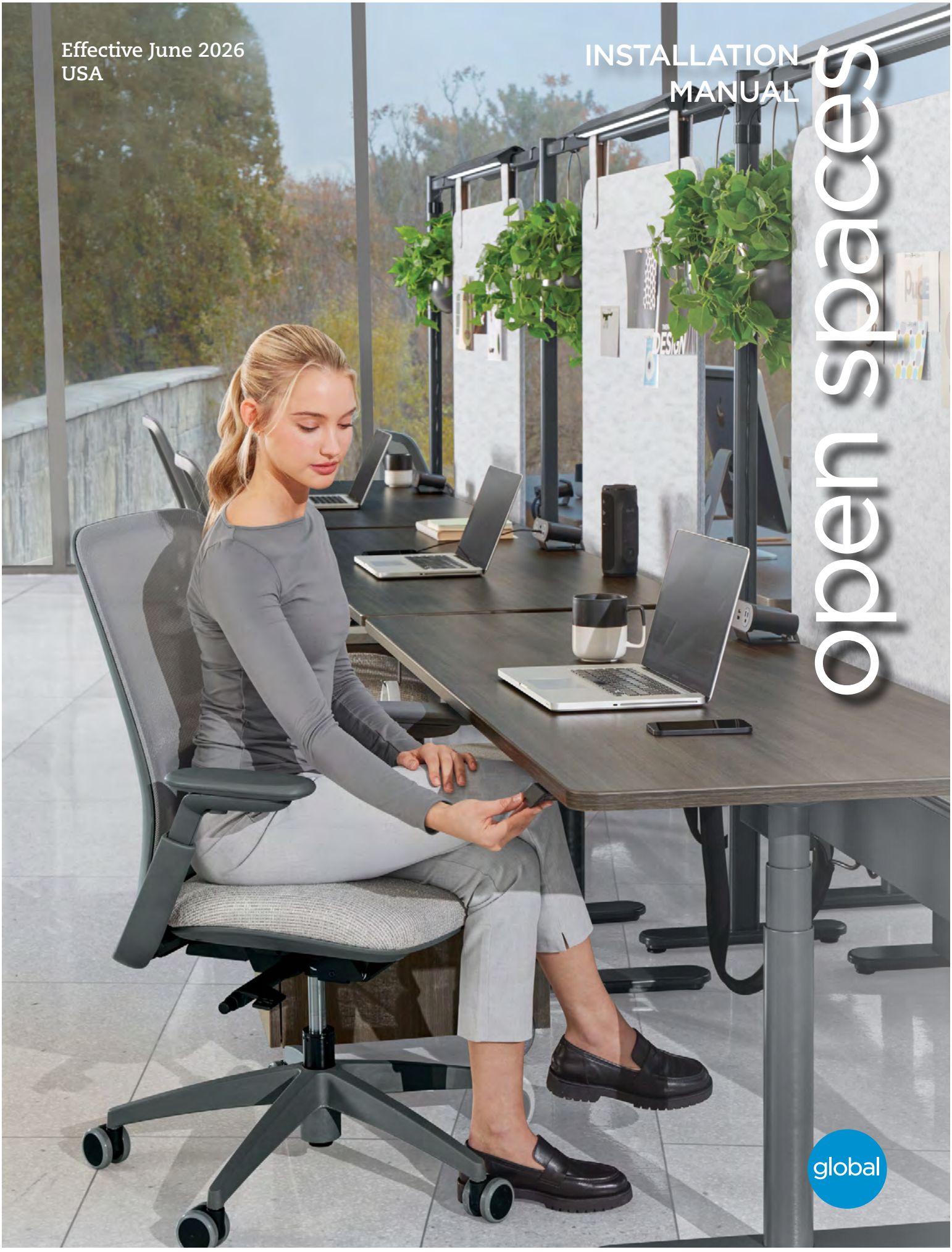

global

OPEN SPACES INSTALLATION GUIDE

TABLE OF CONTENTS

Beam Configuration Guide ..... page 3
Raceway ..... page 3
General Leveling Guidelines ..... page 4
End Leg Beam ..... page 5
Inline Beam ..... page 6
Angle Junction Beam ..... page 7
Gable Beams ..... page 8
Electrical Connection to Power Supply ..... page 9
Electrical System ..... page 10
Power Distribution ..... page 11
Duplex Receptacles ..... page 12
Base Feed Kit ..... page 13
Ceiling Feed - End Post ..... page 14
Ceiling Feed - Mid Post ..... page 15
Fixed Height, Semi-Supported Surfaces ..... page 16
Height Adj. - Rectangular ..... page 17
Height Adj. - 120-degree ..... page 18
Handset Use Instructions ..... page 19
Height Adj. - Desk to Beam ..... page 20
Vertical Post, Upper Horizontal Rail ..... page 21
Upper Shelf, Inset ..... page 22
PET Felt Modesty ..... page 23
Glass Beam Mounted Privacy Panels ..... page 24
Hanging Accessories ..... page 25
Privacy Panel ..... page 26
Modesty Panel ..... page 27
Linear Light ..... page 28
PET Felt Box ..... page 29
Hanging Planter ..... page 30
Hanging Pendant Light ..... page 31
Standard Storage Handle ..... page 32
Work Cart Storage Handle ..... page 33

Required Installation Tools

Safety Glasses
Gloves
3/8" Nut-Driver
Power Prill (var speed, rev)
Magnetic drill bit holders
1/4" Nut-Driver
5/16" Nut-Driver
#2 Robertson Screwdriver
#3 Robertson Screwdriver
Large 1/4" Blade Screwdriver
3/16" Diameter Punch
Utility Knife
48" Long Level
Tape Measure

Additional items you may find useful:

#2 Phillips Screwdriver
#3 Phillips Screwdriver
Adjustable 8" Wrench
Needlenose Pliers
Frame Dolly
Two wheel cart
Furniture Cart with Straps

Hardware Code Listing

S1	007280011	WOOD SCREW
S4	V007290079	1/2 x 1/2 NC RD SQ/SL COMBO MS
S7	SC00785032	10-24X3/8 BUTTON HD ZN
S16	00728001	1/4-20X1 L SCKT HD CAP SCREW
S28	L007290001	1/4-20 X 1 1/4 PANHEAD SCREW
S29	BR20046523	#8/32 X 7/8 TR SQ/SL
S30	SK00795016	M6 X1MM THRD X10MM BTN HD SCRW
S34	BR00729015	1/4-20 X30MM HEX JOINT CNNCTR
S35	BR00565002	#8 X 0.38 FH THRD FORMING SCRW
S59	007280012	QUADX 10-24-3/4 FLAT M-SCREW
S63	V007290038	1/4-20X1 PANHEAD SCREW
S65	SOH2003009B	1/4-20 THREADED STEEL T-NET
S66	SOH2003005	1/4-20 x 1.5" ZINC PLATED PAN HEAD SCREW
S67	BE00729003	1/4-20 UNC NYLON INSRT LOCKNUT
S68	V007290038	1/4-20 X 1/2 FLAT QUADX MS
S69	BR20046520	JOINT SCREW CNCTR 1/4-20X20MM
S70	SC007290002	CLAMP FOAM PAD
S71	BR2004658	1/4-20 x 7/8 ZINC PLATED STEEL PHILLIPS FLAT HEAD SCREW
S72	BR007290067	#10 X 3/4 WOOD SCREW
S81	007220008	#8 X 1/2" RD HD DRILLING SCREW
S82	FLP00729008	#10 x 1-1/4 FH WOOD SCREW
S83	SOH2003003	#12 X 3/4 RH SCREW
S95	007280013	#10 3/4 FLAT H WOOD SCRW
S112	007280060	#8 x 1/2 PAN SOCKET WOOD SCREW

Important Notes

HANDLING TIPS:

- Handle furniture with care.
- Protect product during off-loading and throughout installation.
- Do not drag products at any time to avoid damage.
- Use caution when removing packaging materials, sharp staples used to secure packaging may be exposed.
- Raceway covers may shift during transit, ensuring all covers are accounted for within protective wrapping.
- Read instructions thoroughly.
- Consult design layouts and/or installation drawings for precise product placement.
- Shipping labels for each product include a QR code for on-site digital access to instructions.

OPEN SPACES BEAM STABILITY RULE SET:

- Freestanding* linear** beam runs require either 24" wide T-Legs or laminate gables at the beam ends and at every beam connection.
- The upper frame system cannot be attached to any freestanding* linear** beam run less than 72" in length.
- Hanging whiteboards, pegboards and upper shelving cannot be used on freestanding* linear** beam runs supported by single sided laminate gables.

*Freestanding refers to power beams without double span gables at both ends or without any physical attachments to desks or tables. If any desks or tables are attached to the beam run or if the beam run has double span gables at both ends, 18" deep feet can be used in all locations and there are no restrictions on the use of the upper frame system, shelving or hanging boards.

**Linear refers to any beam run that does not have a change in direction, by way of any 90-degree, or any 120-degree junction. If there is any change in direction along a beam run, 18" deep feet can be used in combination with post legs at each connection and there are no restrictions on the use of the upper frame system, shelving or hanging boards.

Beam Configuration Guide

End Leg Connection **In Line Connection**

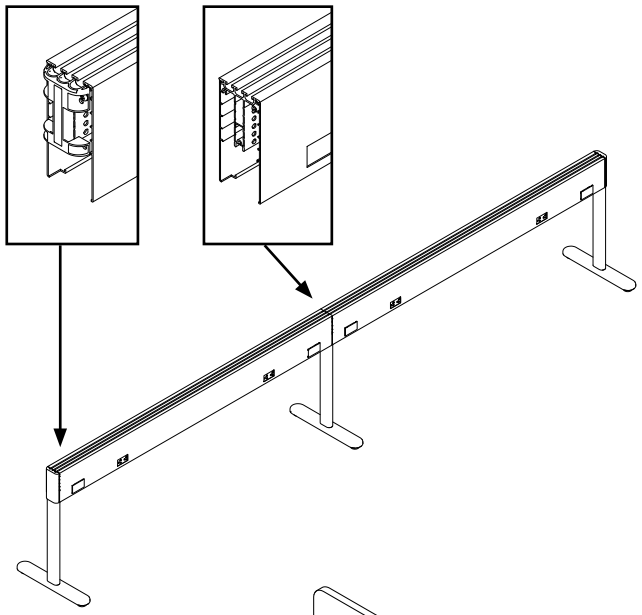

Junction Connection

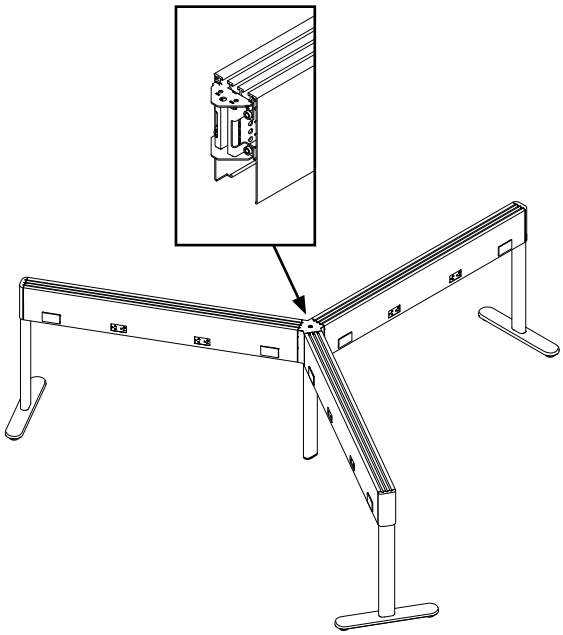

Gable Connection

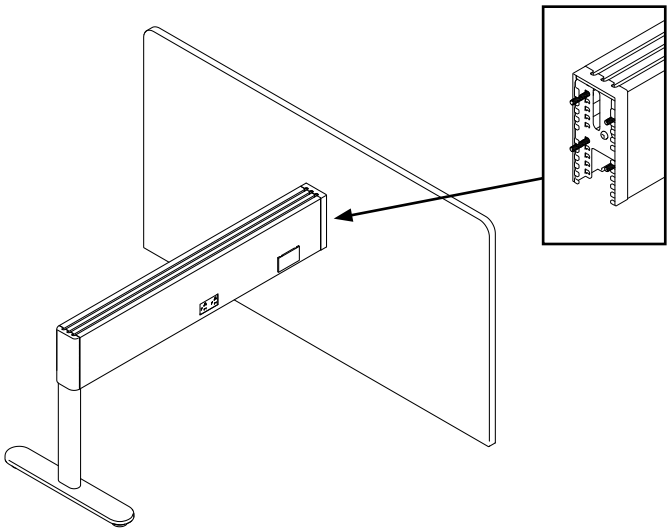

NOTES:

- Refer to design layout for precise leg type placement.
- All beams ship with applicable end connections preassembled.
- Beam types cannot be modified on site, ensuring placement corresponds to beam type per design layout.
- Available beam heights of 21" or 27".

Raceways

Open Spaces beam raceway covers hinge from the top of the beam (**A**) and click into the bottom of the conduit clip (**B**). Raceway covers ship installed onto the beam.

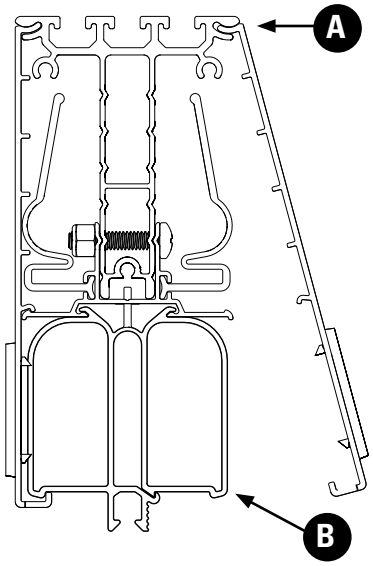

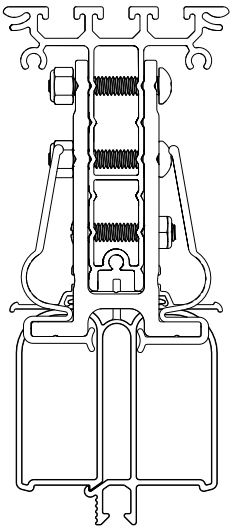

General Leveling Guidelines

DO NOT TIGHTEN THE FASTENERS UNTIL THE ENTIRE STRUCTURE IS LEVEL.
Beams have six mounting positions for the leg connections; each position offering 0.5" of adjustment for a total of 2.5" of leveling at beam and an additional 0.5" of adjustment with the leveler.
The levelers offer an additional 1/2" of adjustment.

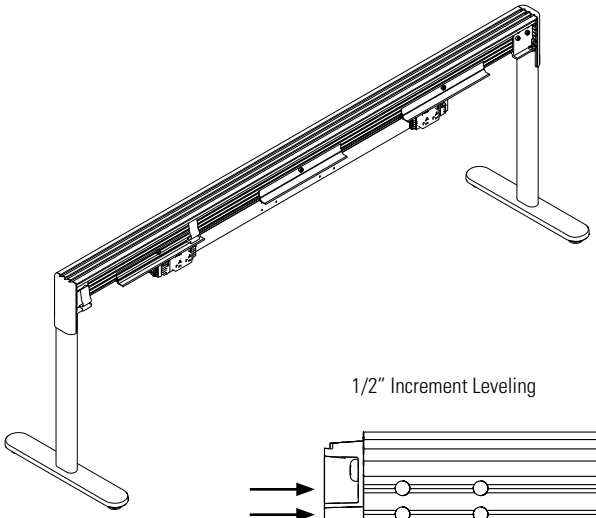

1/2" Increment Leveling

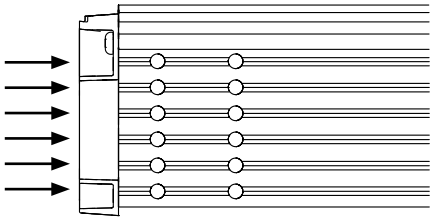

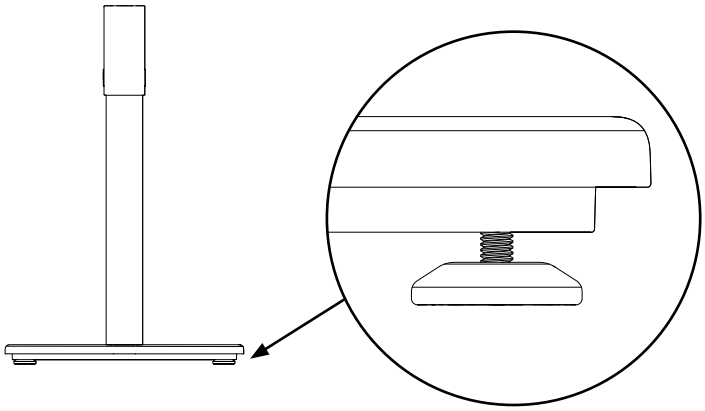

- Remove the raceway covers from the beam.
- Place the beam onto the support structure, whether it be legs or gables.
- Position your level on top of the beam.
- Click the beam into place on the support, adjust as needed when leveling the entire structure.
- Insert the necessary fasteners.

NOTE: If having difficulty leveling, it may be that one side of the beam is clicked at a different height as the other side of the beam based on the location.
- Minute adjustments of 0.5" can be done by adjusting the levelers.
- Once all adjustments have been made and the entire structure is level, you can now tighten the fasteners.

End Leg Beam - SOELB, SOILB, SOELG, SOEJB and End Leg - SOLEB

STEP 1: To assemble the End Leg, secure the leg mount end (**B**) to the post (**C**) using fasteners (S63). Secure the foot (**D**) to the post (**C**) with fasteners (S66). Screw in levelers (**E**).

STEP 2: Remove the raceway covers from the beam (page 3). Hold the End Leg upright and bring the beam (**A**) down into the leg mount end (**B**). Continue with the next leg. Once all legs are installed, level the beam using the horizontal notches in the beam (**A**). See "General Leveling Guidelines" on page 4 for more details.

STEP 3: Secure the end cap (**F**) to the leg mount end (**B**) with fasteners (S4).

STEP 4: Secure the beam (**A**) to the leg mount end (**B**) using fasteners (S66) and (S67).

STEP 5: Snap in the data cable clips (**K**).

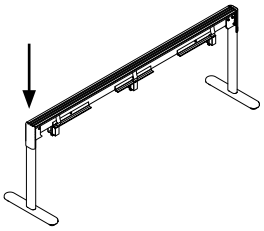

Shown without the raceway covers

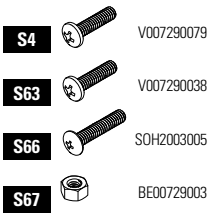

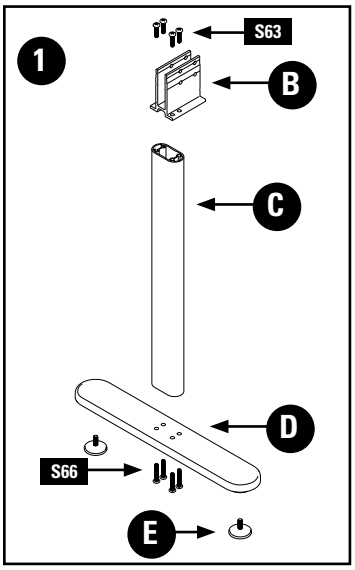

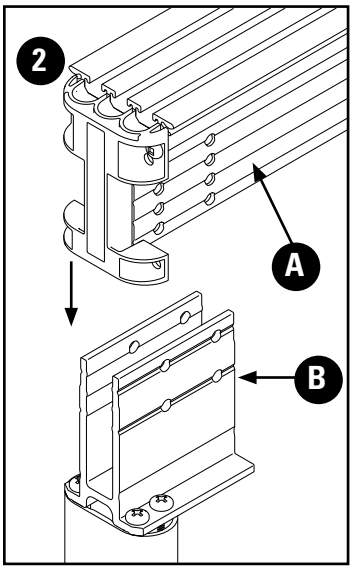

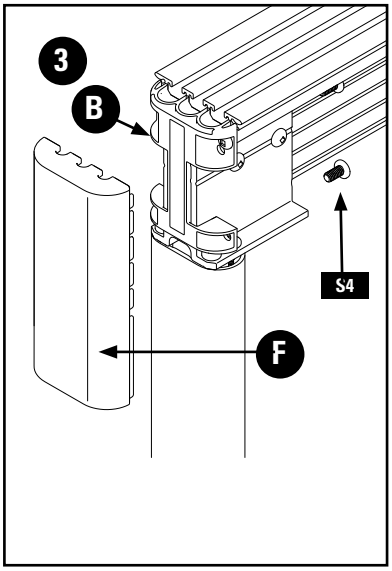

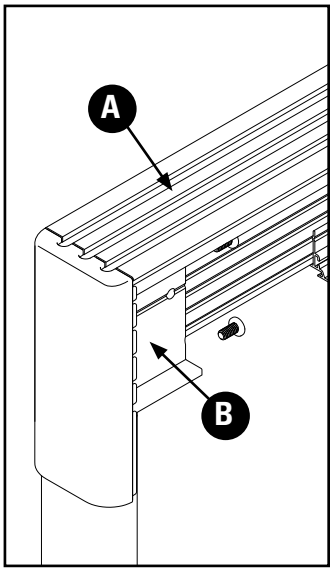

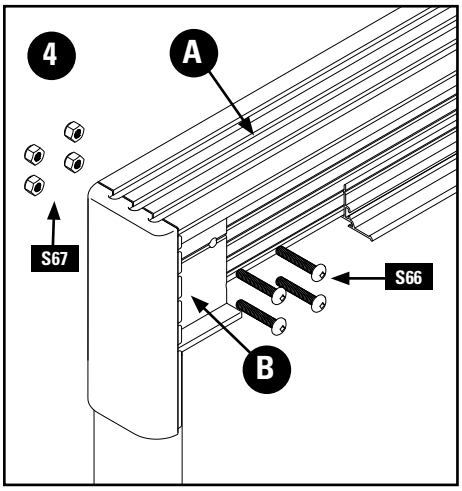

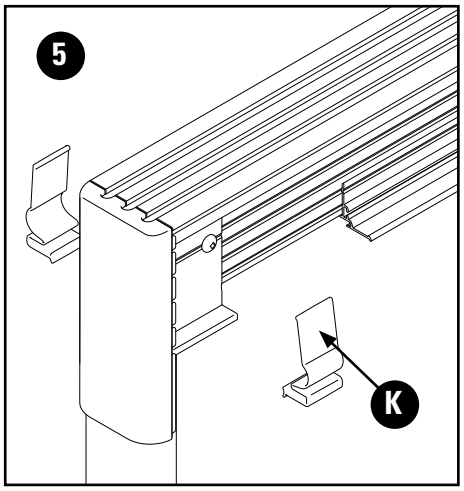

Inline Beam - SOINB, SOILB, SOIGB, SOIJB and Mid T-Leg - SOLMT and Mid Post Leg - SOLMP

STEP 1: To assemble the Mid T- Leg, secure the leg mount mid (**B**) to the post (**C**) using fasteners (S63). Secure the foot (**D**) to the post (**C**) with fasteners (S66). Screw in levelers (**E**).

STEP 2: Remove the raceway covers from the beam (page 3). Hold the Mid T-Leg upright and bring the beam (**A**) down into the leg mount mid (**B**). Continue with the other legs. Once all legs are installed, level the beam using the horizontal notches in the beam (**A**). See "General Leveling Guidelines" on page 4 for more details.

STEP 3: Secure the beam (**A**) to the leg mount mid (**B**) using fasteners (S66) and (S67).

STEP 4: Snap in the Data Cable Clips (**F**).



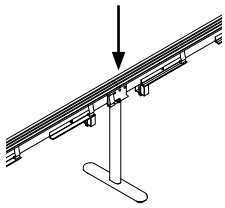

Shown without the raceway covers

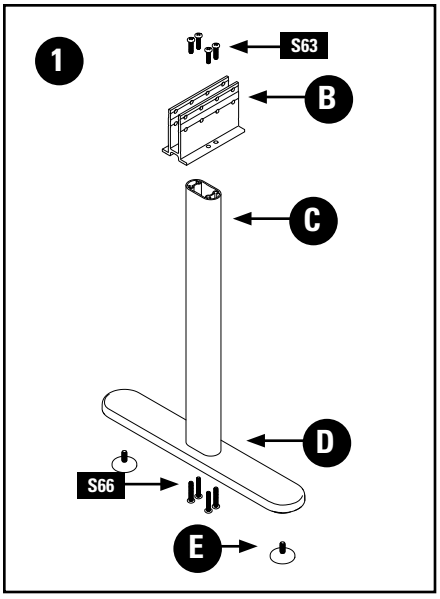

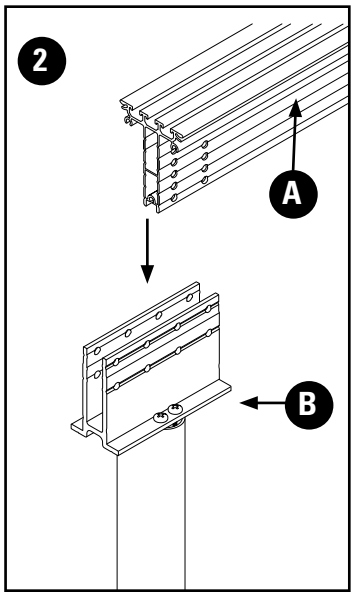

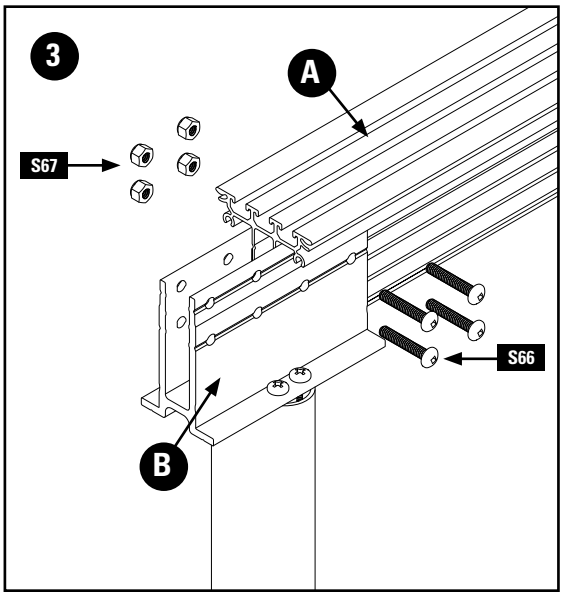

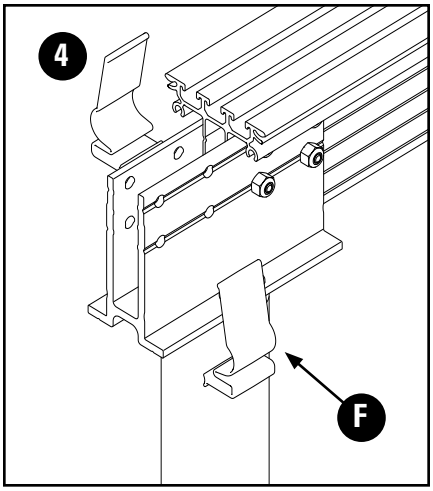

Angle Junction Beam - SOJGB, SOJJB, SOIJB, SOEJB and Junctions - SOJ

STEP 1: To assemble the junction leg, secure the ganging plate (**A**) to the post (**C**) with fasteners (S28). Secure the leg mount end (**B**) to the ganging plate (**A**) using fasteners (S4). **DO NOT tighten fasteners.**

STEP 2: Hold the junction leg assembly upright and bring the beam (**D**) down into the leg mount end (**B**). Continue with the next Leg. Once all legs are installed, level the beam using the horizontal notches in the beam (**A**). See "General Leveling Guidelines" on page 4 for more details.

STEP 3: Secure the beam (**D**) to the leg mount end (**B**) using fasteners (S66) and (S67). **DO NOT tighten fasteners.**

STEP 4: Install the junction covers (**M**) with fasteners (S4).

STEP 5: Slide in retainer plate (**E**) as shown. Drop in top cap (**F**). Wiggle the beams until the top cap fits in and lines up with all beams. Secure the top cap (**F**) with fastener (S34).

Tighten all fasteners for the junction connection.

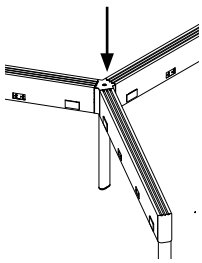

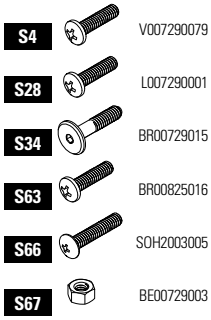

GANGING PLATE POSITION

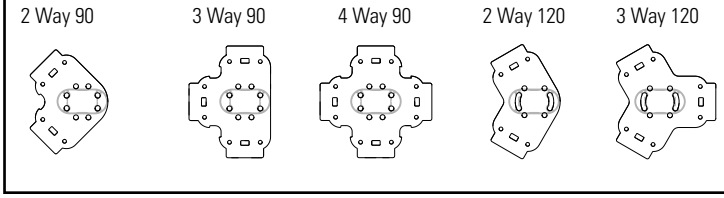

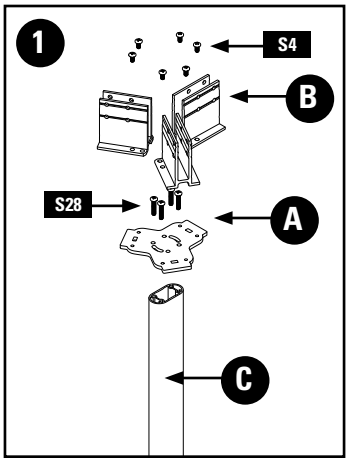

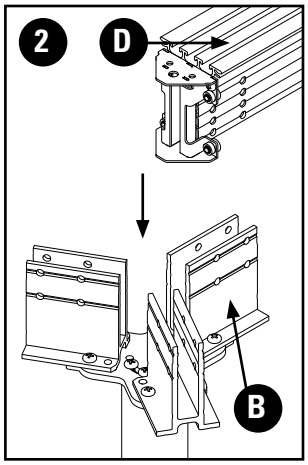

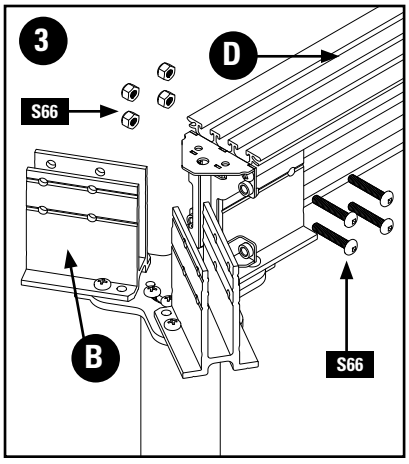

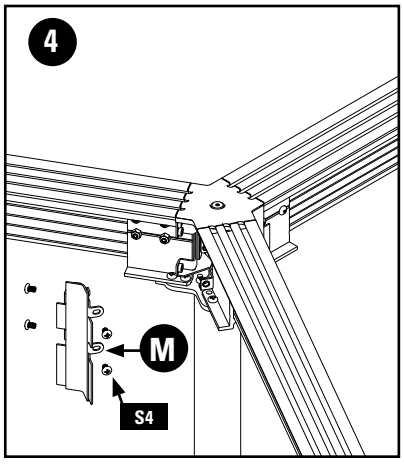

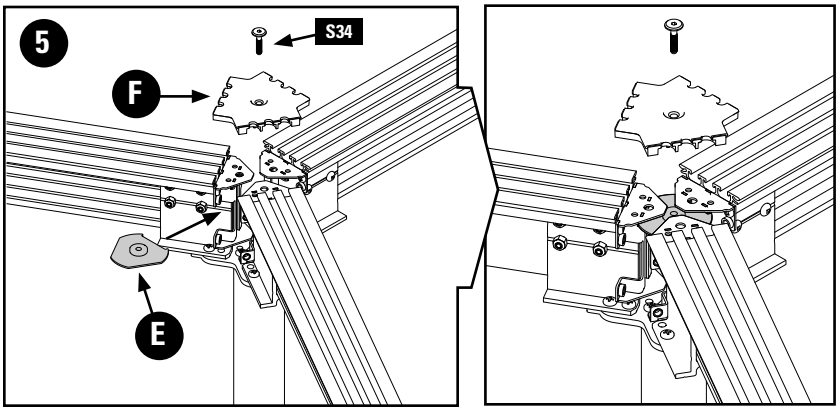

Retainer Plate Position

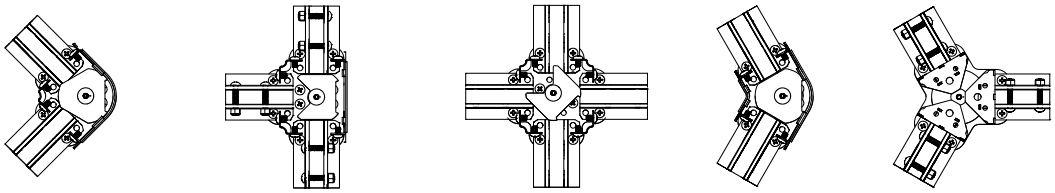

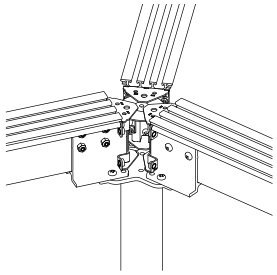

Gable Beam - SOELG, SOGGB, SOIGB, SOJGB and Gable SOSEG, SOSPG, SODEG, SODPG

STEP 1. Install gable bracket (**A**) onto the beam (**B**) using (S83) screws.

STEP 2. Install the beam with bracket onto gable (**C**) using (S28) screws.

Level the beam. See "General Leveling Guidelines" on page 4 for more details.



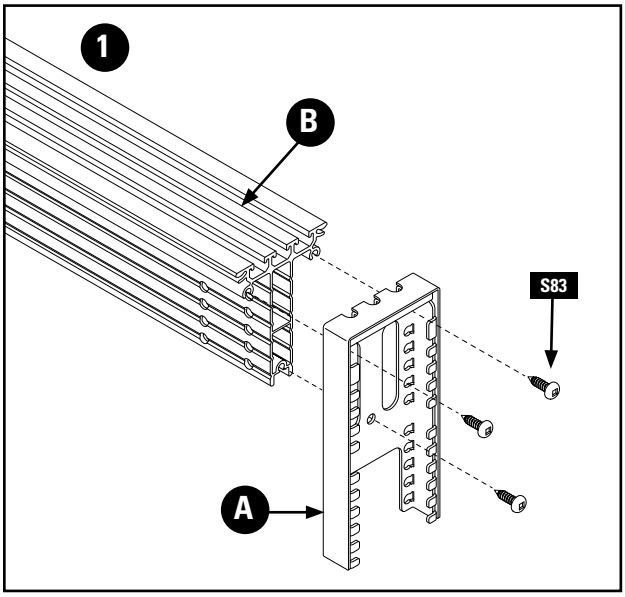

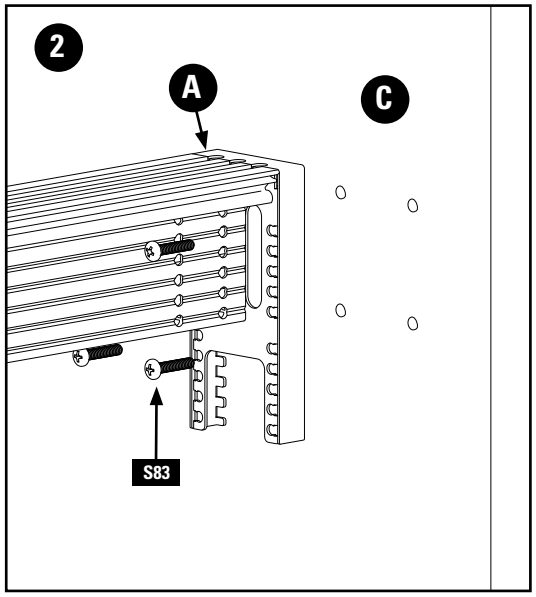

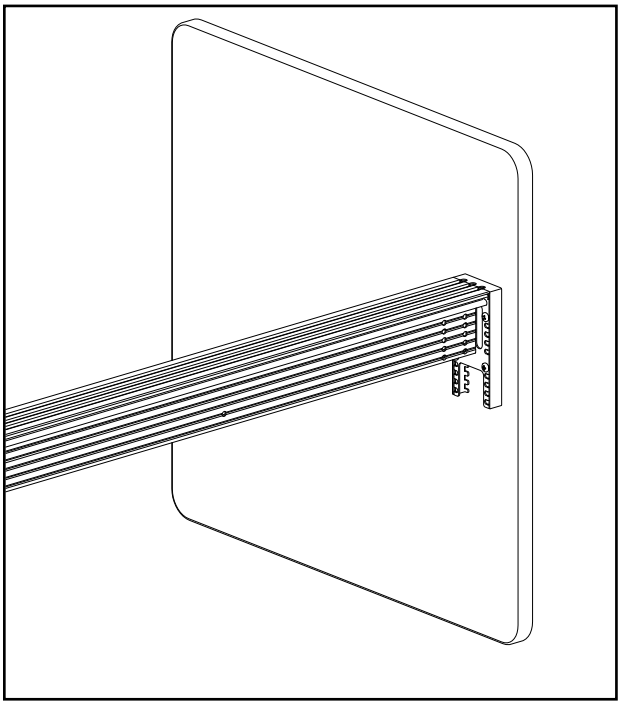

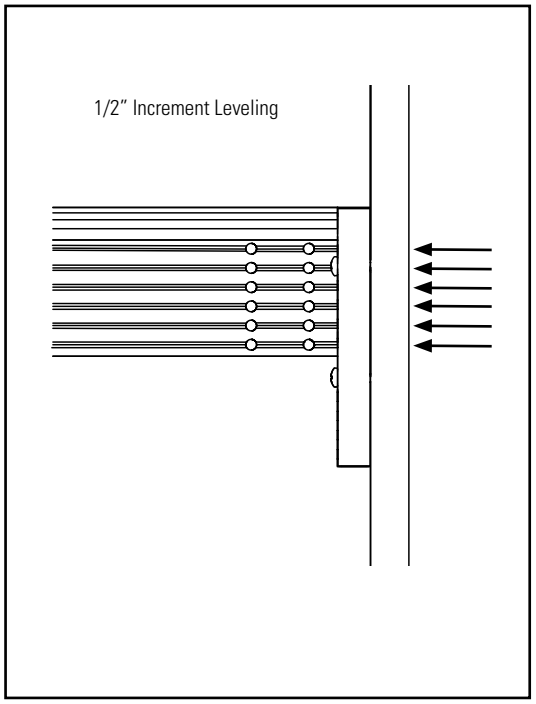

Electrical Connection to the Power Supply

Once you have all the electrical components in the panels, it is recommended that you check the entire installation against the electrical plans, ensuring that all components are at specified locations and are mechanically interconnected.

Note: Always determine that the electrical components are electrically connected to only one power supply.

It is recommended that installation of the electrical feed be made under the supervision of a licensed electrician in accordance with applicable codes and regulations.

All types of Power Feeds (ceiling or base) are ready to be hard-wired to the building power supply. The wires are color-coded as shown in the chart.

After the connection has been completed, close metal junction boxes and activate the power.

Check the power distribution throughout the whole installation before the customer's sign off.

Any alterations to UL or CSA listed panels and electrical components will void the listing and the manufacturer's warranty. The manufacturer will not be responsible for any damage or bodily harm caused by not following codes and manufacturer's specifications.

4-2-2 Wiring Schematic
8-Wire Shared Neutral
"2 + 2" - 2 Utility Circuits, 2 Dedicated

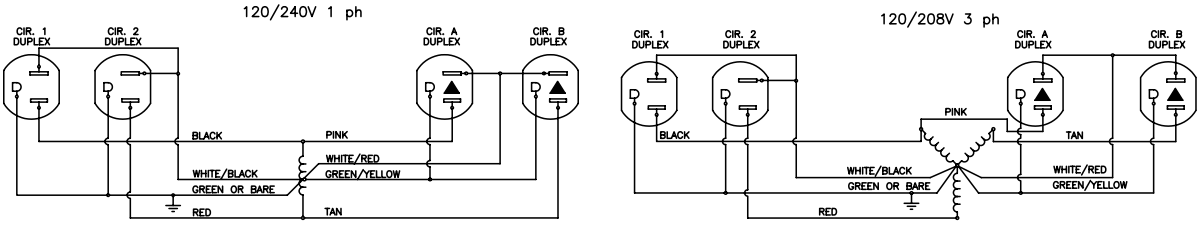

8 Wires	4 Circuits	Receptacles	Specifications
4 Lines (12 ga.)	2 Utility circuits	Duplex - Up to 12 duplex receptacles per circuit	System rated for connection to a grounded 120/240 V single phase, 20A,
2 Neutrals (10 ga.)	2 Dedicated Circuits	(Up to 48 per infeed)	60Hz or 120/208 V, 3 phase, 20A, 60Hz branch circuit for U.S. and 15A if
2 Grounds (12 ga.)			product is marked with a C-UL Mark. Outlets rated 15A max.

Electrical System Installation

This page provides an exploded view of a sample configuration highlighting each electrical component required when specifying a layout.

A: SOEE8PDHxx Power Distribution Housing
B: SOEE8JCxx Jumper Cable
(**Ba**) SOEE8JC28 connects two beams connected with an inline connection.
(**Bb**) SOEE8JC30 electrically connects two beam connected with an Angle Junction.
C: SOEE8Dx Duplex Receptacle
D: SOEE8HHxx Housing-to-Housing Cable
F: SOEE8CF01 Ceiling Feed - Single
(**Fa**) SOEEPCFEPxx End Beam Ceiling Feed Post
(**Fb**) SOEEPCFMPxx Mid Beam Ceiling Feed Post
G: SOEE8BF01xx Base Feed - Single

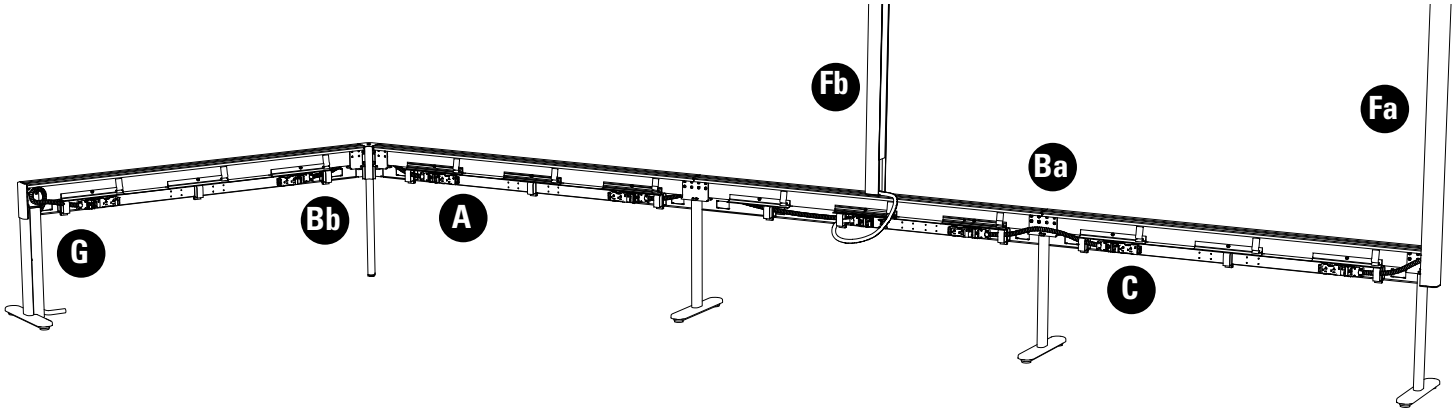

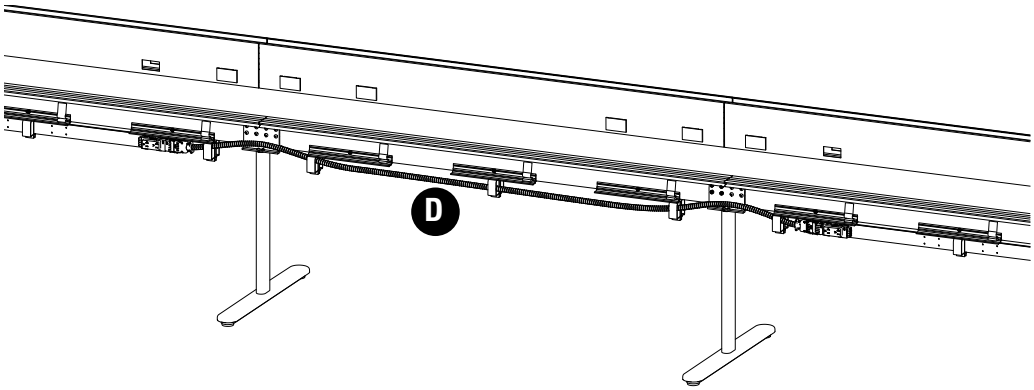

Power Distribution Housing - SOEE8PDH, Jumper Cable -SOEE8JC, Housing to Housing Cable - SOEE8HH

Ensure that all beams are mechanically connected prior to electrical installation. Note that the conduit clip has two sides, one can be used for the electrical system and the other for data cables.

STEP 1: Install the conduit clip (**B**) into the beam (**A**).
- **a**. Hook the clip on one side.
- **b**. Spread the clip.
- **c**. Hook the other side.
- **d**. Close the clip.

Repeat for all clips.

STEP 2: Locate the Power Distribution Housing (**C**) into the holes in the beam (**A**) using the bolts (**D**). Rotate the cams to secure the Distribution Housing (**C**). Tighten the bolts (**D**).

STEP 3: Connect Jumper Cable or Housing to Housing Cable (**E**) as shown below.

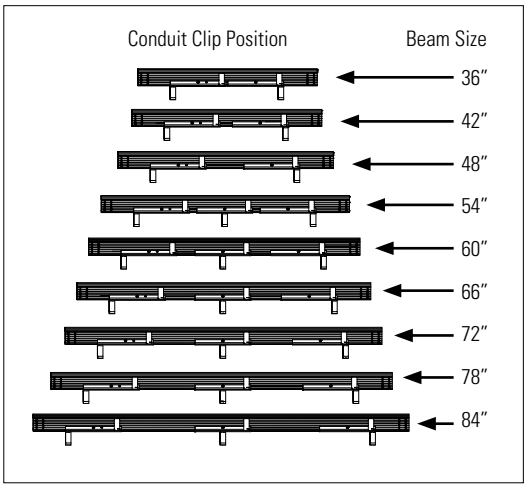

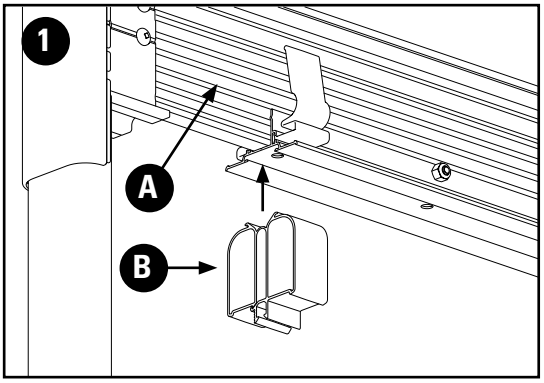

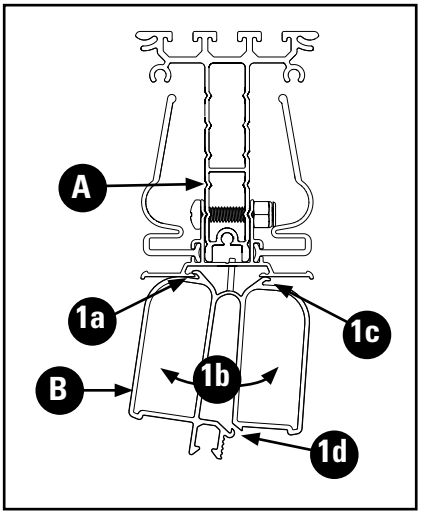

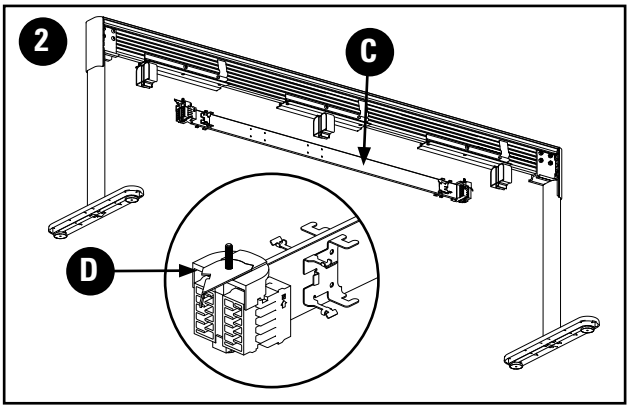

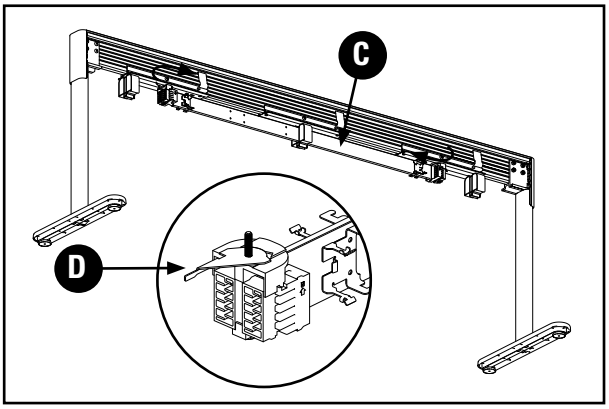

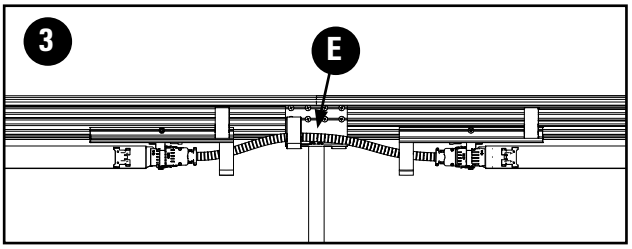

Duplex Receptacles - SOEE8D

Ensure the power feed is installed but not yet connected to the building supply.

After the power distribution housings are installed to the beam and connected with jumper cables, install the duplex receptacles at specified locations per the electrical plan.

Note: It is important to follow your electrical plans exactly since these were created based on the maximum current capacity of each circuit. Each circuit is rated at 20 amps in the USA (15 amps in Canada). Maximum Duplex Receptacles per circuit is 6. Failure to do so may overload the circuit, thus causing electrical issues, electrical shock or even a risk of fire.

STEP 1: Position the receptacle into the mounting bracket on the Power Distribution Housing. There is an arrow and letter "N" to indicate which way is up.

STEP 2: Slide it towards the assembly connectors. Be sure the parts are fully seated to assure proper electrical connection and the spring clips are properly engaged for mechanical security

STEP 3: Install the cover (**F**) by inserting the top curve profile into the curved profile of the beam.
Hinge the cover (**F**) down and snap into the beam to secure.

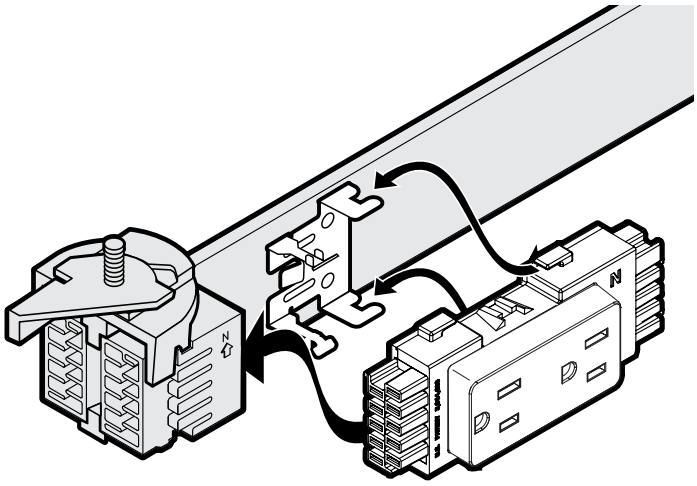

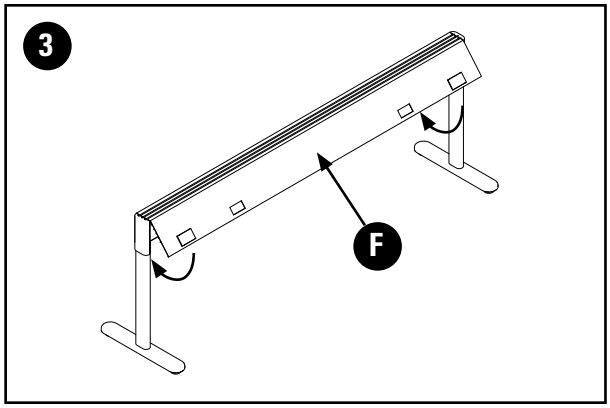

Base Feed Kit - SOEE8BF01

STEP 1: Line up base feed bracket (**A**) to the leg mount end (**B**) and the beam leg (**C**). Secure the base feed bracket (**A**) with fasteners (S81).

S81 007220008

STEP 2: Run base feed cable (**E**). Snap base feed to Power Distribution Housing (**F**). Must loop cable as shown.

STEP 3: Slide the base feed cover (**D**) onto the base feed bracket (**A**) at the top. The cover (**D**) should fall behind the bracket (**A**) bottom flange.

STEP 4: Secure the cover (**D**) to the bracket (**A**) with fasteners (S81).

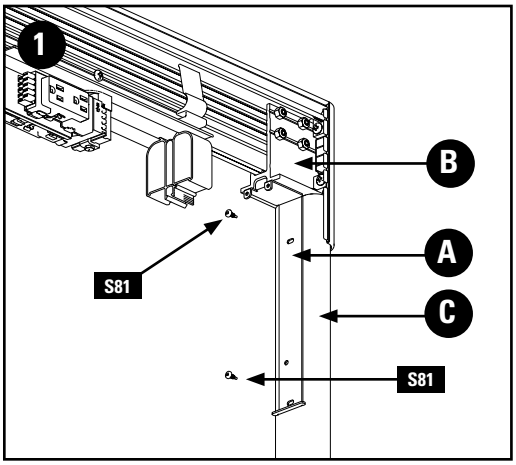

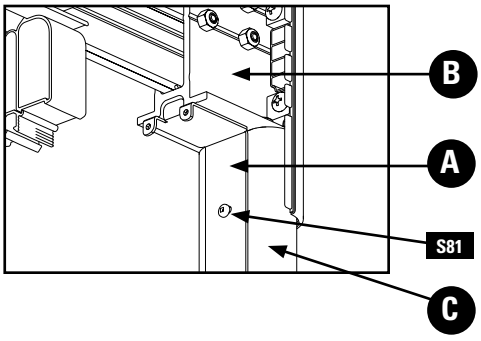

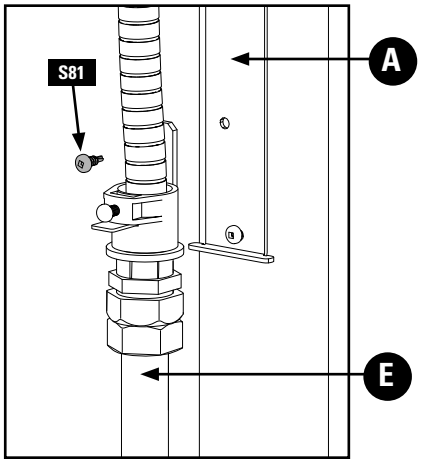

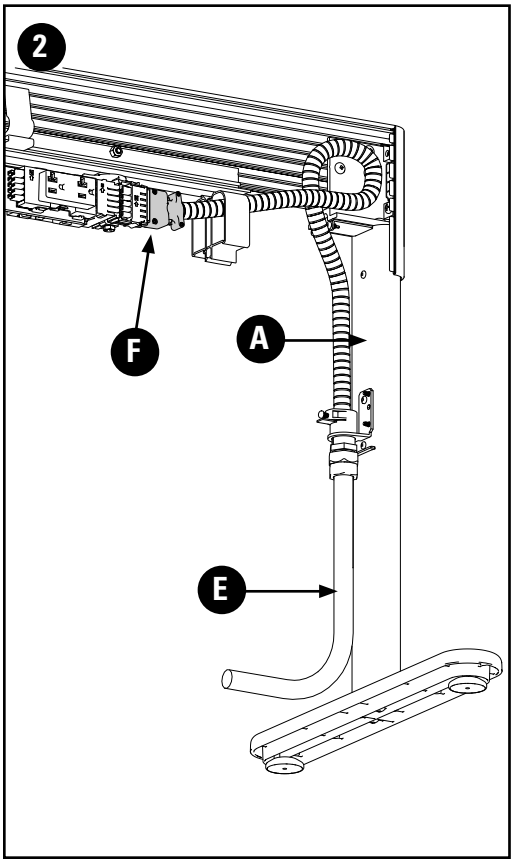

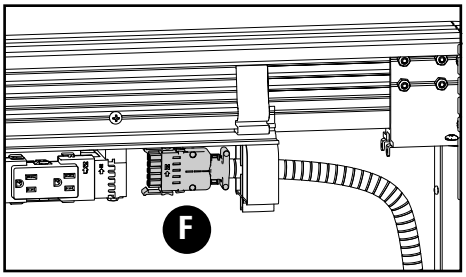

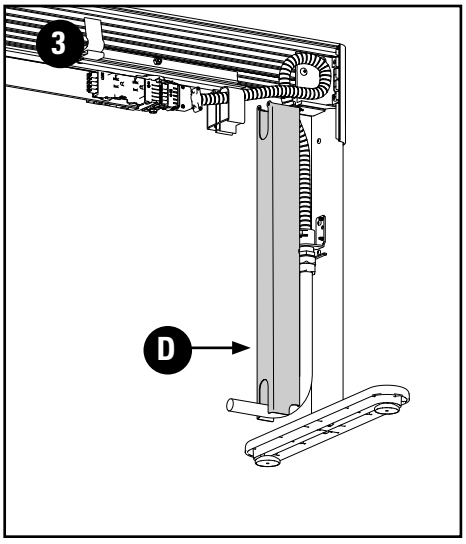

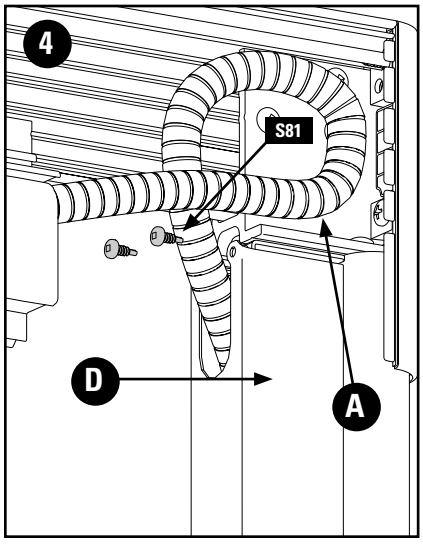

Note: There is no data space on the side where the infeed cable loops.

Ceiling Feed Post - End Beam - SOEPCFEP and Ceiling Feed - SOE8CF

If an end cap (**F**) has been installed, please remove it before proceeding.

STEP 1: Install the ceiling feed mount (**A**) to the beam (**G**) with fasteners (S66).

STEP 2: Snake the Ceiling Feed (**B**) through the ceiling feed mount (**A**). Connect the Ceiling Feed (**B**) to the Power Distribution Housing (**C**).

STEP 3: Attach the ceiling feed outer housing (**D**) to the ceiling feed mount (**A**) with fasteners (S82).

STEP 4: Snap in the ceiling feed inner cap (**E**) as shown below.

Note the position of the ceiling feed inner cap is dependent on whether the beam has an Upper Frame or not.

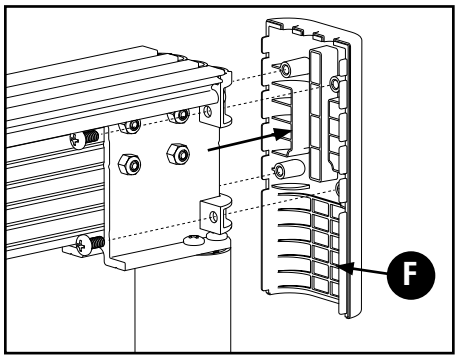

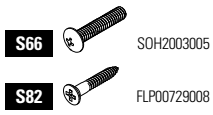

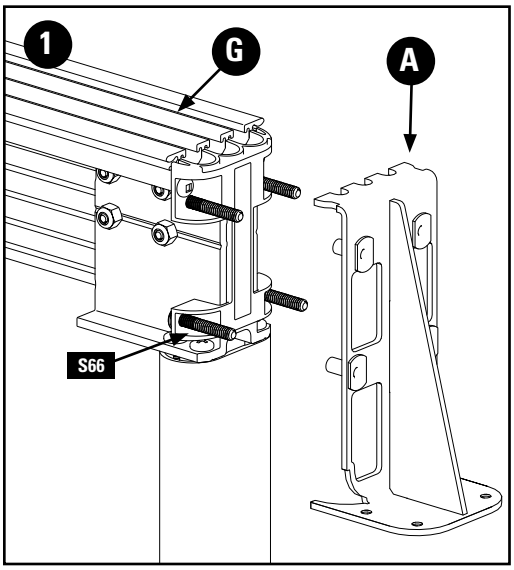

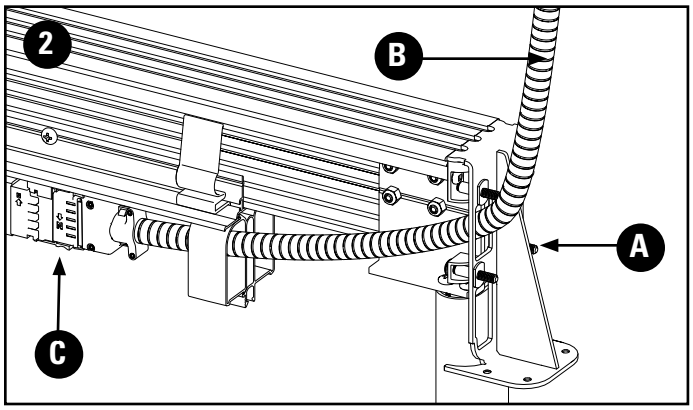

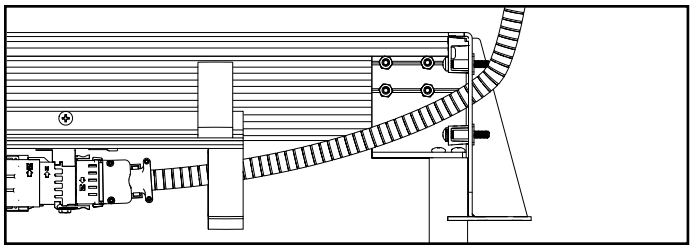

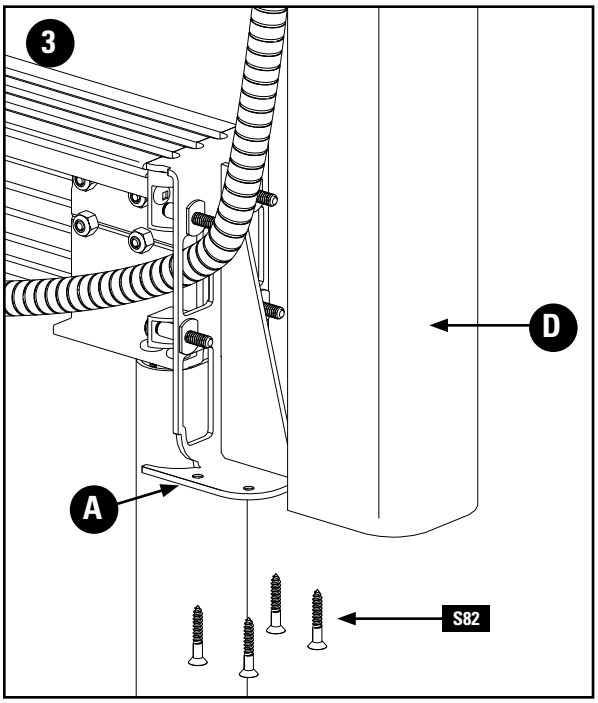

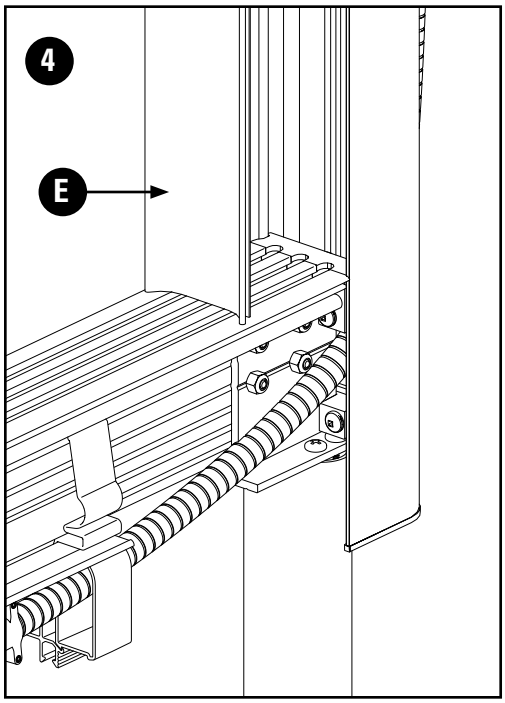

Position of the ceiling feed inner cap for beam **with Upper Frame**

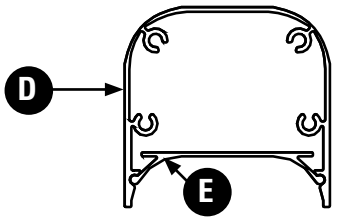

Position of ceiling feed inner cap for beam **without Upper Frame**

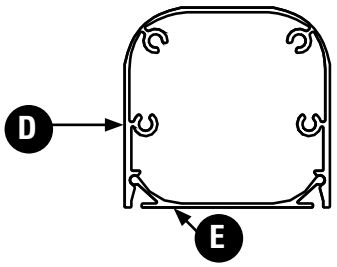

Ceiling Feed Post - Mid Beam - SOEPCFMP and Ceiling Feed - SOE8CF

STEP 1: Assemble the mid mount (**A**) with fasteners (S7) and (S65).
Attach the mid mount assembly to the ceiling feed outer housing (**B**) with fasteners (S82).

STEP 2: Position the ceiling feed outer housing (**B**) where you want it along the beam.
Secure the ceiling feed outer housing (**B**) to the beam with an Allen Key. Rotate the t-nuts (S65) to secure.

STEP 3: Run the Ceiling Feed (**D**), snap it into the Power Distribution Housing (**F**) and secure it with the strain relief bracket (**C**) with fasteners (S7).

STEP 4: Snap in the ceiling feed inner cap (**E**) in place.
Note: Neoprene cable manager is included in this kit.

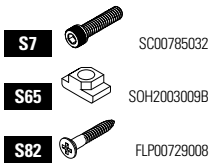

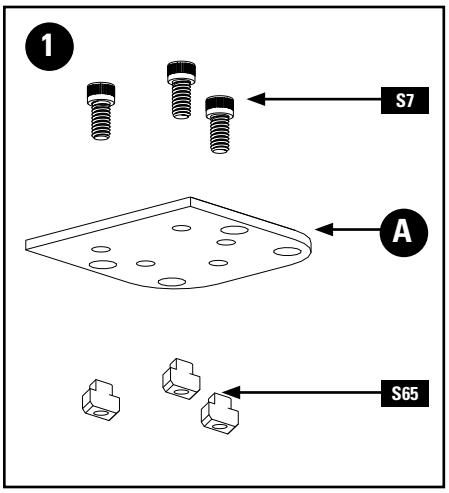

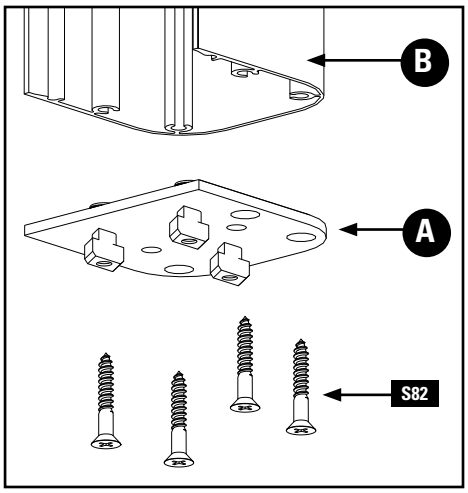

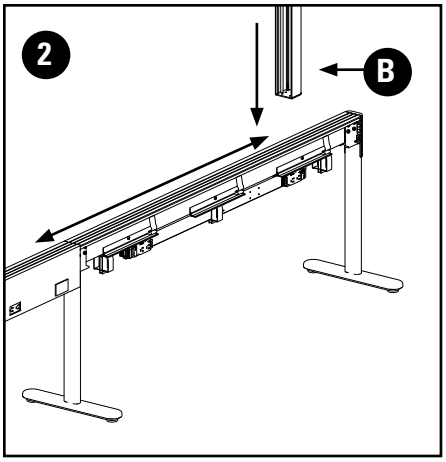

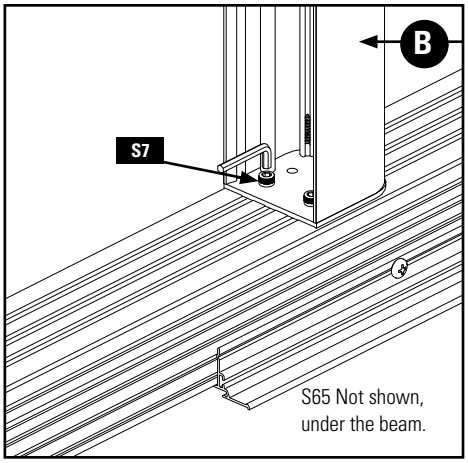

Position of ceiling feed inner cap for beam **without Upper Frame**

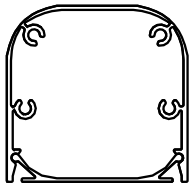

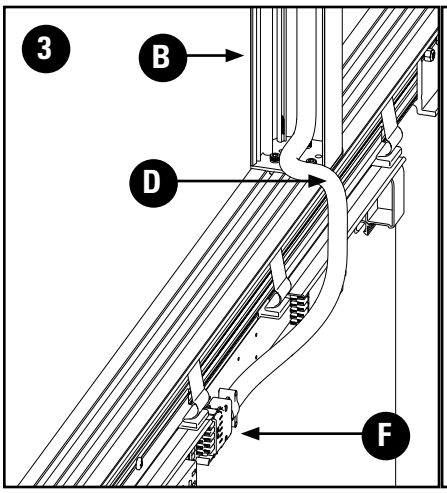

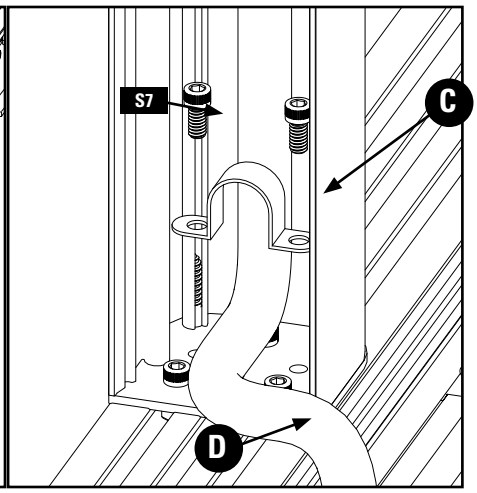

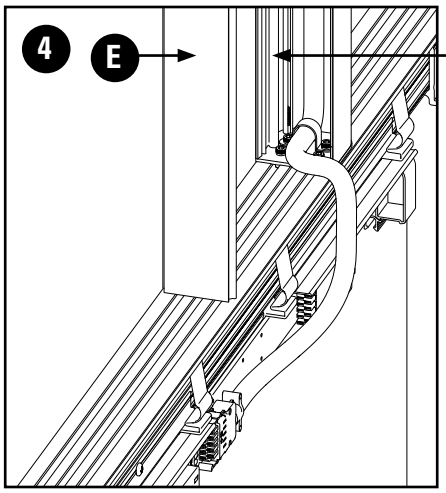

Fixed Height Semi-Supported Surfaces - SOSWFS, SOSWFSC, SOSW120D, SOSWC120D, Single End Leg - SOSWFSL/R or Shared Leg -SOSWFSS and Surface Support Bracket - SOSWSP

It is recommended to install the Upper Frame prior to the Semi-Supported Surface as the Upper Frame is installed in the middle rail of the beam while the Semi-Supported Surfaces are installed on the outer rails of the beam.

Note: Surface Support Brackets and Support Channels are included with the 120 Degree Surfaces, but not the Rectangular Surfaces, they must be ordered separately.

STEP 1: Assemble the Surface Support Bracket (**A**) with the fasteners (S7) and the t-nuts (S65). **Do not tighten**.

STEP 2: Assemble the Single End Leg by connecting the leg extrusion (**C**) to the leg plate (**B**) with fasteners (S71).

STEP 3: Install the Surface Support Bracket (**A**) to the surface (**D**) using fasteners (S95) at the pre-drilled locations. Install the Single End Leg (**B**) to the surface (**D**) using fasteners (S95) at the pre-drilled locations. Install Surface Support Beam (**E**) to the surface (**D**) using fasteners (S1).

STEP 4: Drop the completed surface into the beam groove. Tighten into position. Note: The outer grooves are used for the Surface Support Brackets while the middle groove is used for the upper frame and accessories.

Note: Shared Leg is installed in the same manner as the End Leg.

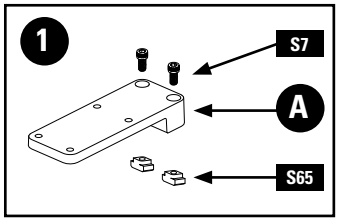



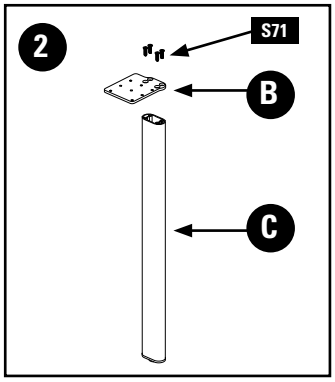

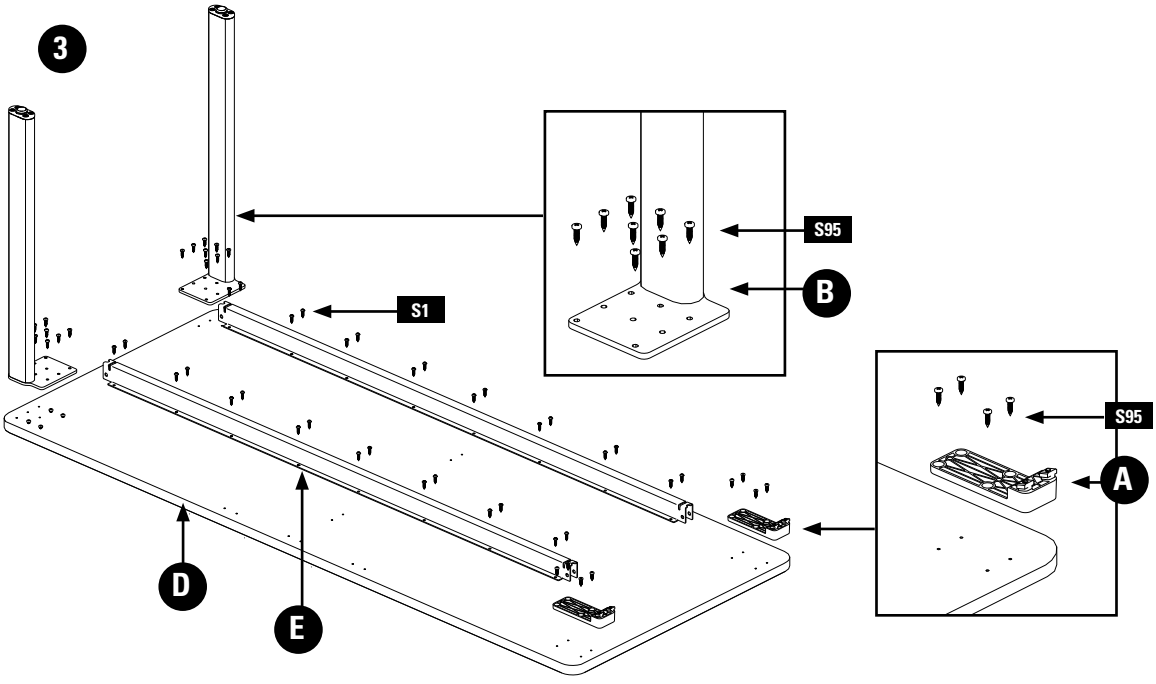

2 Possible Positions

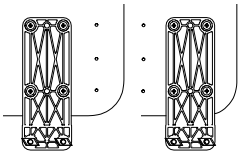

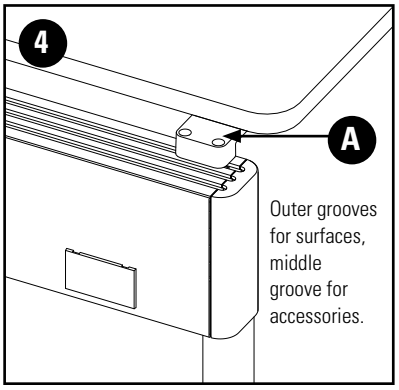

Flush Plate Application (SOSWFSP)

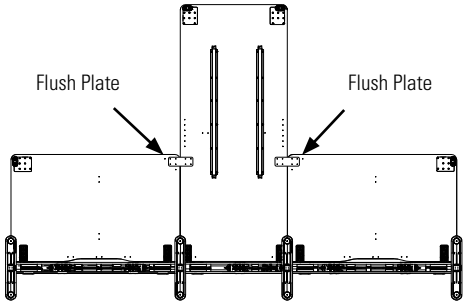

Shared Leg Application (SOSWFSS)

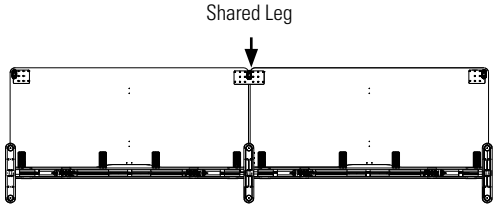

Height Adjustable Base - SOHAFE2C, Support Channel - SOSWHAT, Height Adjustable Surfaces - SOWHSR, SOWHSRE, SOWHSRR, SOWHSRL,SOWHSTRL, SOWHSRRL, SOWHSRLL

STEP 1: Assemble the height adjustable column (**A**) and the foot (**B**) with the fasteners (S16). Install the levelers (**C**)

STEP 2: Attach the column bracket (**E**) to the surface with fasteners (S1). Ensure the bracket nub aligns with the pre-drilled hole.

STEP 3: Install the support channels (**F**) using fasteners (S1).

STEP 4: To install the height adjustable column (**A**), fish the cord through the column bracket (**E**) first, then angle the height adjustable column into the bracket.

STEP 5: Install the height adjustable column (**A**) into the column bracket (**E**). Secure the height adjustable column (**A**) with fasteners (S30).

STEP 6: Attach control box (**G**) between the support channels (**F**).

STEP 7: Attach keypad controller (**H**) to the surface. Connect the keypad, power cord and motor cords to the control box (**G**).

STEP 8: Using two people, flip the table over and level the glides. Plug power into an electrical outlet.

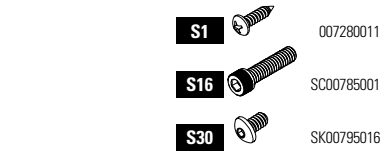

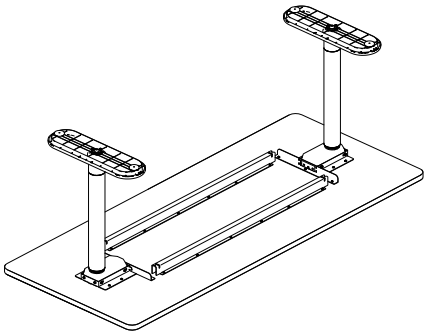

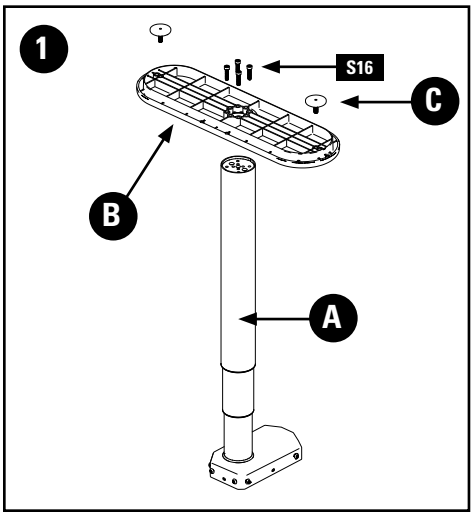

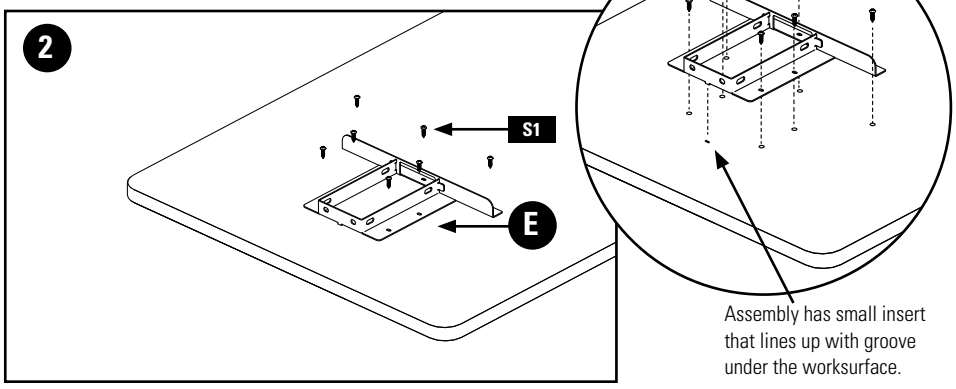

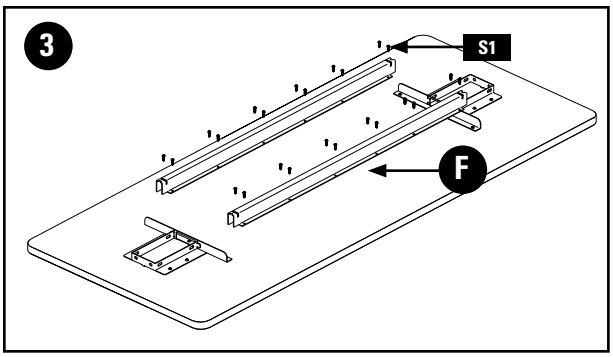

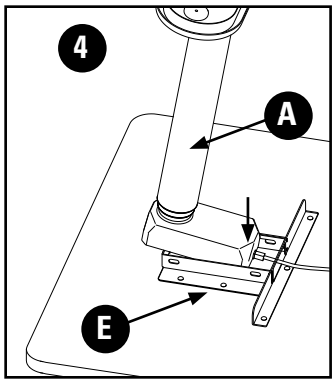

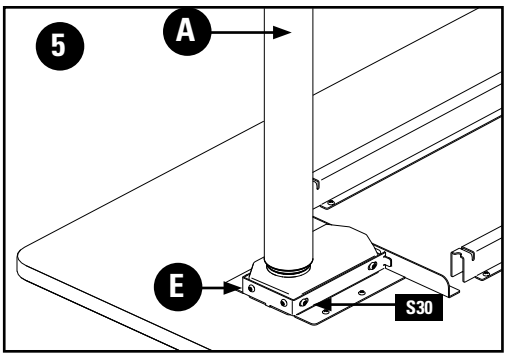

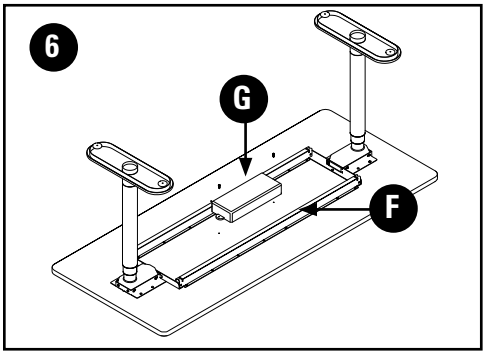

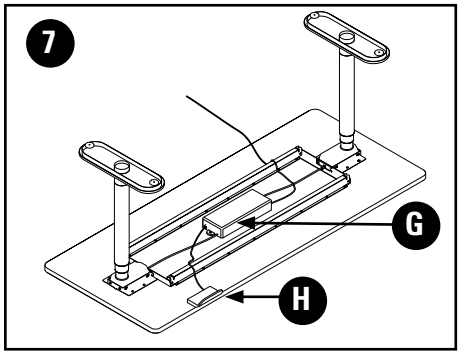

Height Adjustable Base - SOHAFE2C, Support Channel - SOSWHAT, Height Adjustable Surfaces - SOSWH12D

STEP 1: Assemble the height adjustable column (**A**) and the foot (**B**) with the fasteners (S16). Install the levelers (**C**).

STEP 2: Attach the column bracket (**E**) to the surface with fasteners (S1). Ensure the bracket nub aligns with the pre-drilled hole.

STEP 3: Install the support channels (**F**) using fasteners (S1).

STEP 4: To install the height adjustable column (**A**), fish the cord through the column bracket (**E**) first, then angle the height adjustable column into the bracket.

STEP 5: Install the height adjustable column (**A**) into the column bracket (**E**). Secure the height adjustable column (**A**) with fasteners (S30).

STEP 6: Attach control box (**G**) between the support channels (**F**).

STEP 7: Attach keypad controller (**H**) to the surface. Connect the keypad, power cord and motor cords to the control box (**G**).

STEP 8: Using two people, flip the table over and level the glides. Plug power into an electrical outlet.

Hat Channel Size & Location

SOSWH120D3624

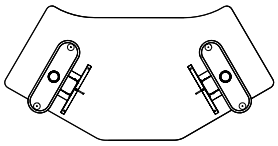

SOSWH120D4224

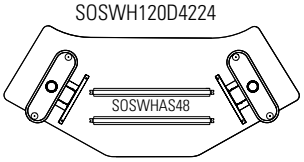

SOSWH120D4824

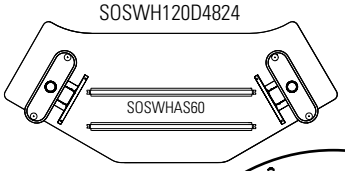



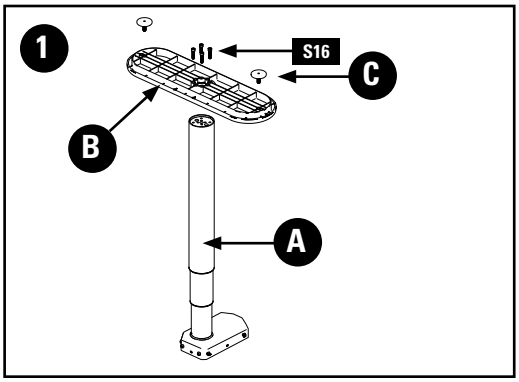

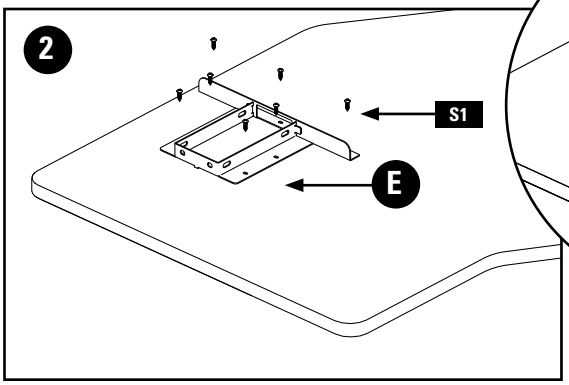

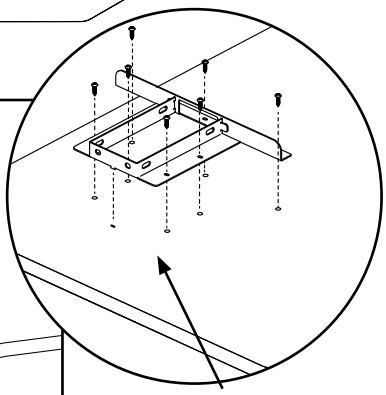

Assembly has small insert that lines up with groove under the worksurface.

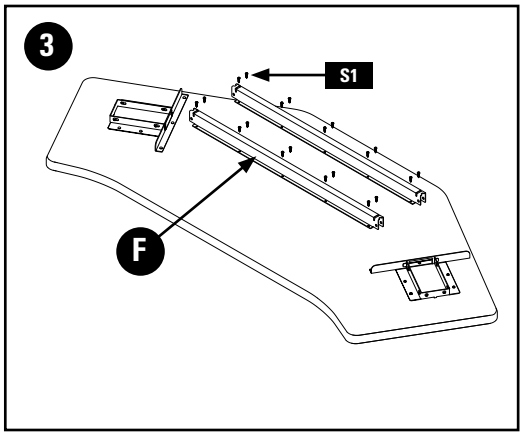

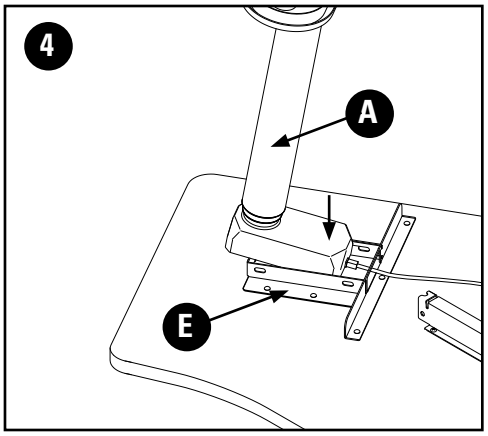

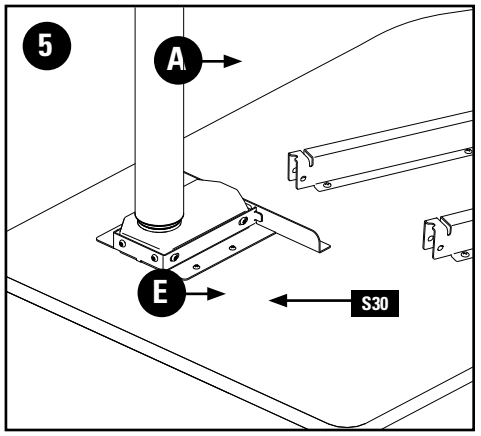

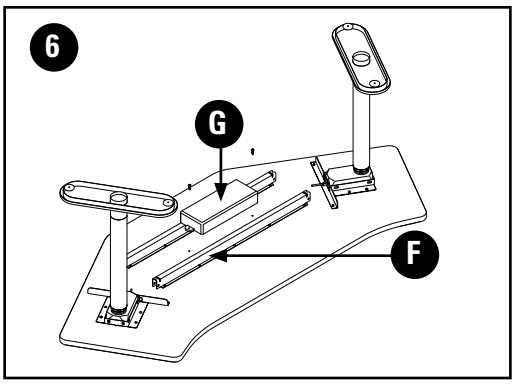

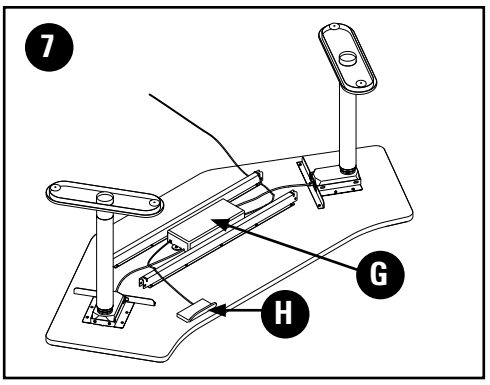

Handset Use Instructions

MEMORY PRESET:

Adjust the base to the desired height. Press the side button and a ♥ will show on the display. Press and hold the side button to set that height. When above 35", ♥ -1 will show. When below 35" ♥ -2 will show. To move to a preset, press down twice to move to the lower preset or press up twice to move to the upper preset.

SEDENTARY REMINDER:



Press and hold the side button to enter the option settings, then press the side button again to enter the reminder setting. Click on settings to choose the desired interval or cancel it, then press the side button to select. There are 3 interval options available: 30 minutes, 40 minutes, and 50 minutes.







After the sedentary reminder is set, a processing bar can be seen below the height display. When time is up, it will go off like a clock for 10 seconds. After the height reaches higher than 39", the processing bar will clear.

LOCK:



Press and hold the side button to enter the option setting, then press the side button again to enter the lock setting.







Lock icon lights up when lock is set.

To unlock, press side button, then press up, down, then side button.

HEIGHT LIMITS:

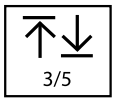

Adjust the base to reach the desired height and press the side button to enter the limit settings option, switch to either MAX view or MIN view and touch the side button again to set the highest limit or lowest limit or to clear the limits.







VIBRATION OPTIONS:



Press the side button and enter the vibration options setting. Press the side button again and click on the setting to switch to a different vibration mode. Press the side button to confirm or cancel it.







TROUBLESHOOTING:

Perform reset procedure if base is not functioning properly or if legs are uneven.

If the display states "RST", perform reset procedure.

If the display indicates an error message ("ER1 - ER"13), confirm all wired connections are secure (legs to cables, cables to control box). Then preform reset procedure.

If the display states "HOT", let base cool down for twenty minutes before use.

⚠WARNING

Resetting the base will require lowering past any set lower limit. Ensure there are no obstructions underneath the base while resetting.

RESET INSTRUCTIONS:

A basic reset is important when troubleshooting. The basic reset is broken up into 2 steps:
*The first step is putting the desk into reset mode.
Note: Entering this mode is required prior to modifying certain settings for the desk.
*The second step immediately following the first will conclude the reset.

Put the Handset into Reset Mode:

1. Press the paddle down until the base reaches its lowest point.
2. Briefly release, then re-press and hold the paddle down, until the display reads: reset. (The desk is now in reset mode.)

Concluding the Reset:

3. Once the desk reaches reset mode, release then re-press and hold the paddle down.
4. Hold until the table lowers past the minimum height, and bumps back up to minimum height.

Height Adjustable Desk to Beam Cable Manager - SOHACB

STEP 1. Install cable manager bracket (**A**) onto the raceway extrusion by hooking it on the edge. Secure onto raceway using screw (S4)

STEP 2. Fasten cable sleeve (**B**) onto the bottom of the worksurface using wood screws (S112). Locate the sleeve relative to raceway duplex. Orient zipper slider (**C**) topside. Once complete, screw the cable sleeve (**B**) to the cable manager bracket (**A**) with screws (S35)

STEP 3. Lay cables inside the sleeve (**B**) and then use the zipper slider (**C**) to close the cable sleeve.

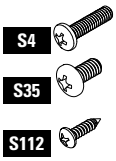

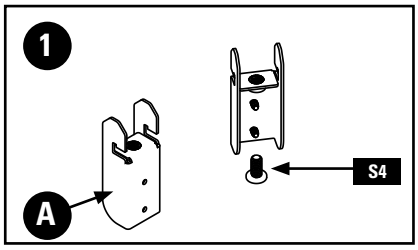

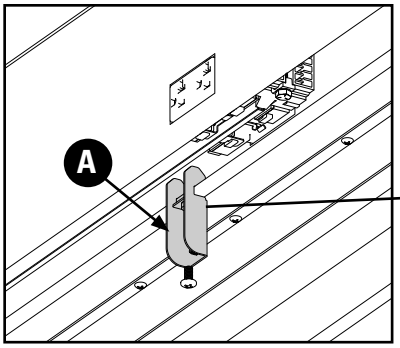

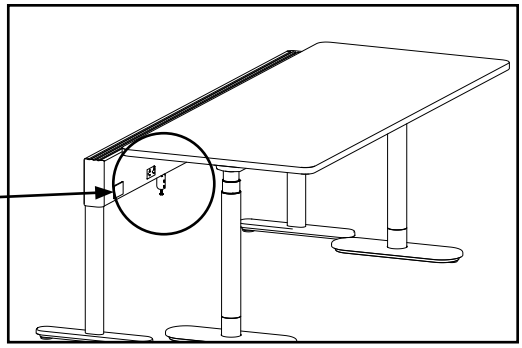

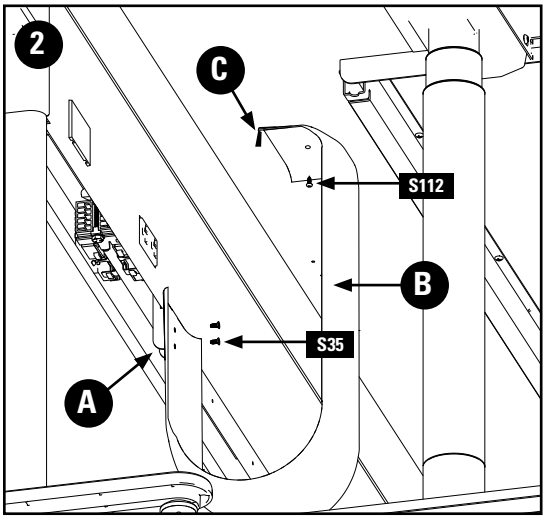

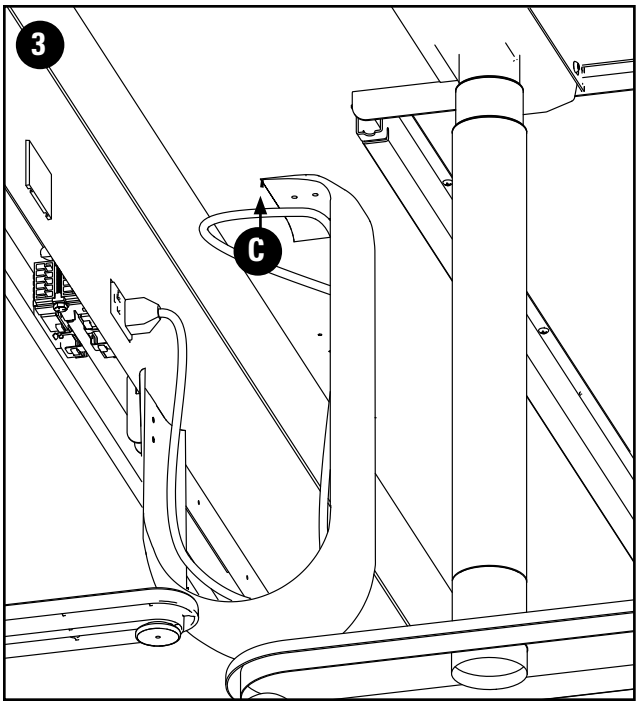

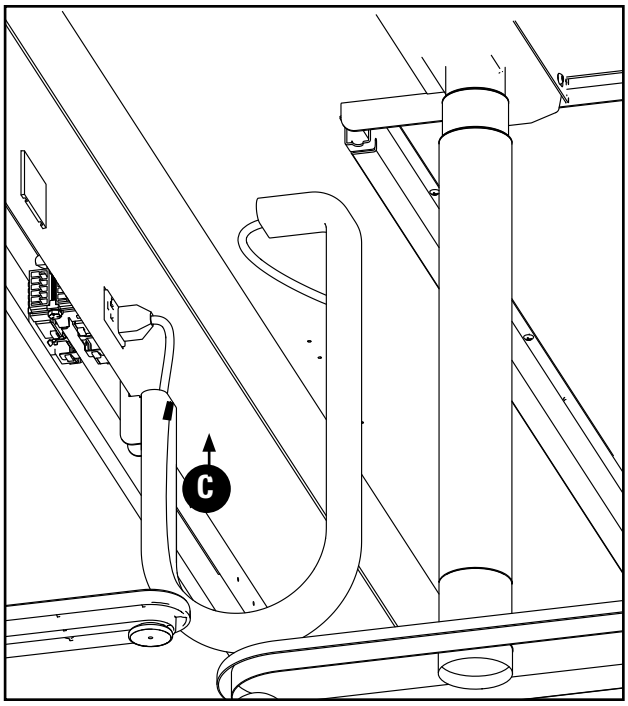

Vertical Post SOAVP and Upper Horizontal Rail - SOAH

STEP 1: Assemble the stanchion base (**B**) to t-nuts (S65) with fasteners (S7). **Do not tighten**. Attach the stanchion base (**B**) to the vertical post extrusion (**A**) with fasteners (S63).

STEP 2: Attach the Upper Horizontal Rail (**D**) to the Vertical Post (**A**) using fasteners (S59).

STEP 3: Attach Vertical Post (**A**) to beam (**C**) with an Allen Key. Rotate the t-nuts (S65) to secure them into the outer beam grooves.



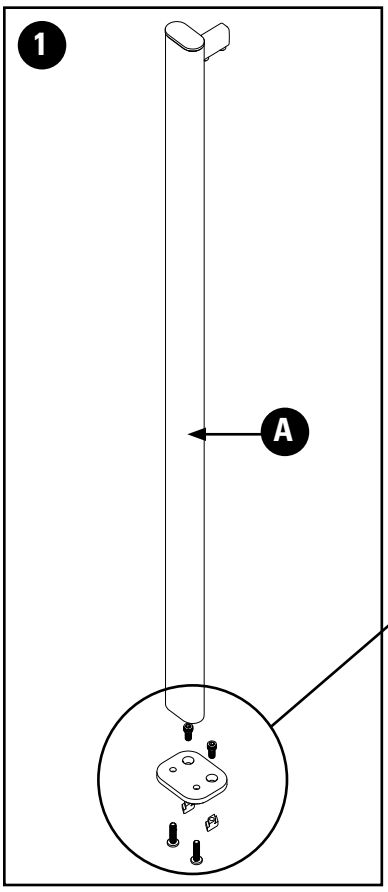

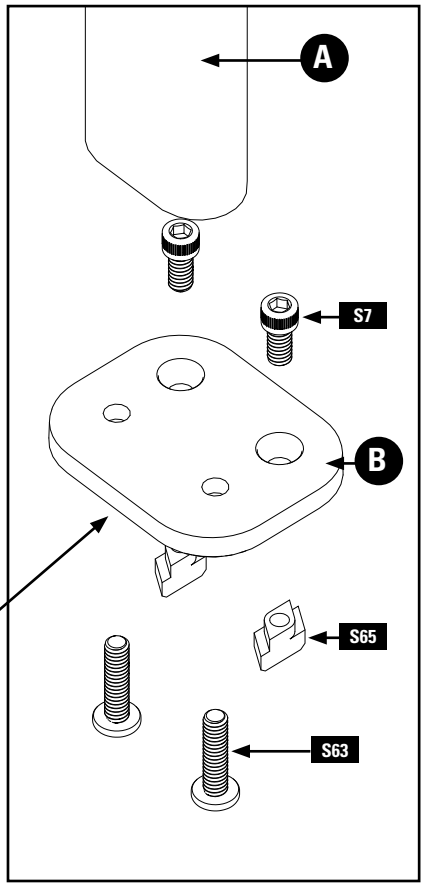

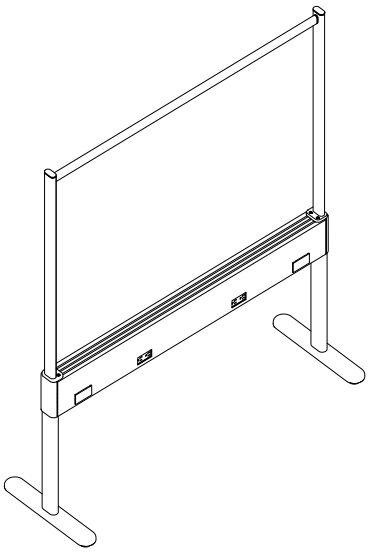

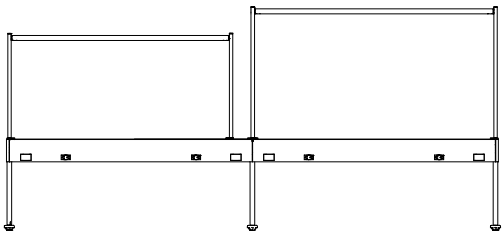

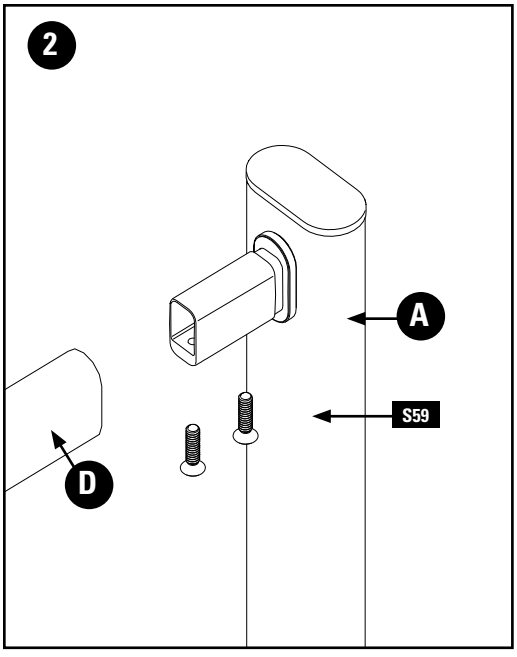

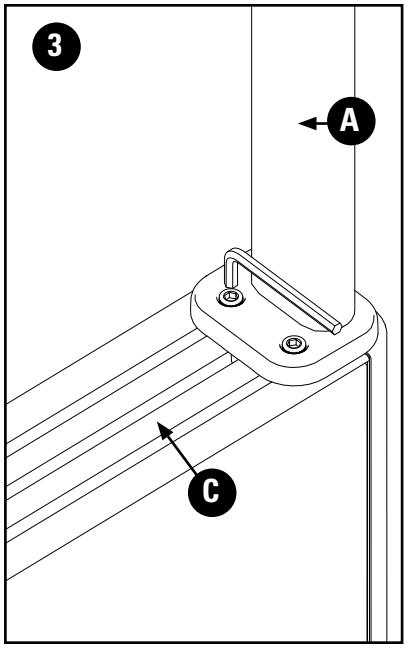

NOTE: Verify the layout to ensure the verticals with and without screw ports for shelving are used at the appropriate location according to the layout.

Upper Shelf - Inset - SOASHS and Beam Shelf - SOASH

Upper Shelf - Inset - SOASHS

STEP 1: Install post shelf bracket (**B**) onto Vertical Post (**A**) with fastener (S68). Repeat on the other side.

STEP 2: Attach the shelf (**C**) to the Vertical Post (**A**) with fasteners (S69).



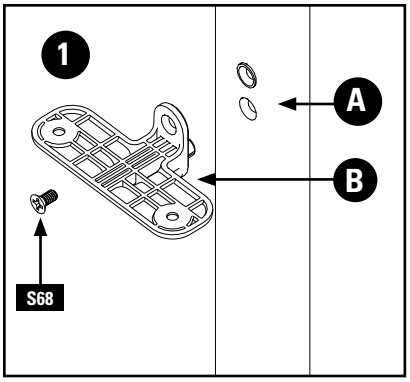

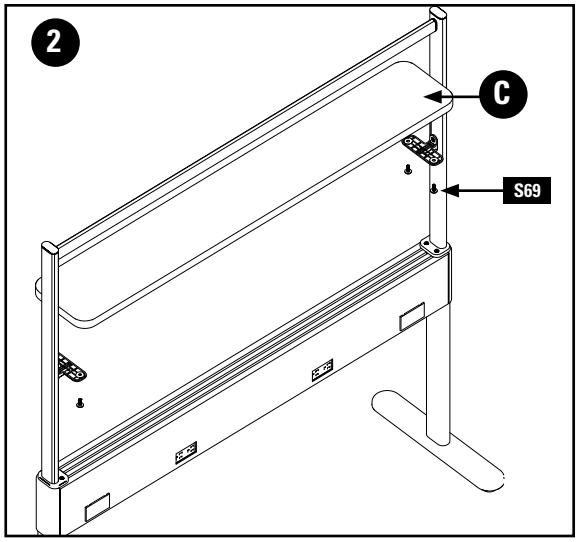

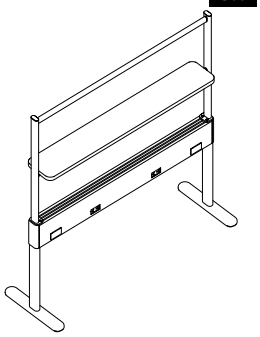

Underside with inserts

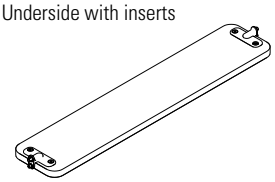

Beam Shelf - SOASH

STEP 1: Install fasteners (S7) and the t-nuts (S65) onto the beam mount bracket (**D**). Install the beam mount bracket (**D**) on the beam with the t-nuts (S65). Do not tighten yet. Move the brackets to line up with the shelf holes. Tighten t-nuts (S65).

STEP 2: Attach the shelf (**C**) to the beam mount brackets with fasteners (S69).

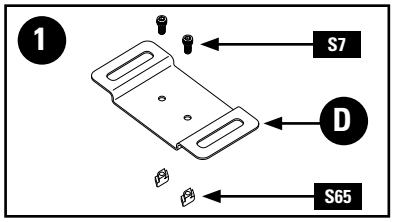

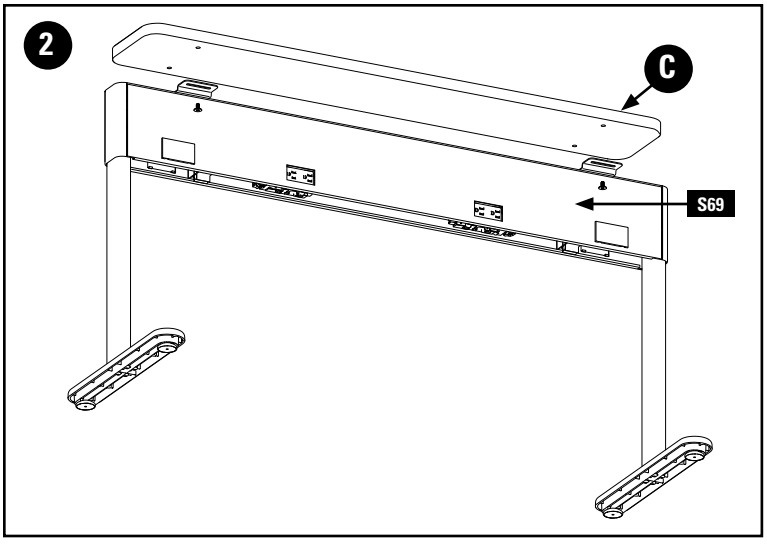

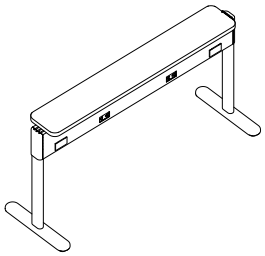

Underside with inserts

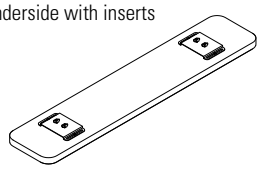

INSET

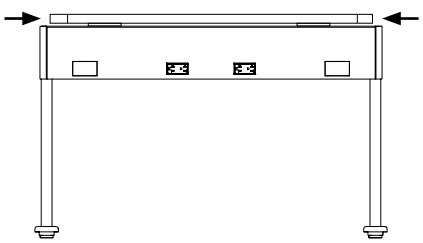

FULL

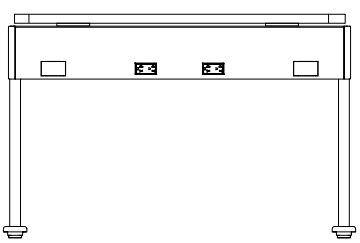

NOTE: Verify the layout to ensure the verticals with and without screw ports for shelving are used at the appropriate location according to the layout.

PET Felt Modesty Panel - SOAFM

STEP 1: Unclip the outer two conduit clips (**A**).

STEP 2: Push in the Modesty Panel (**B**) into the center gap (**C**) of the conduit clips (**A**). Close the end conduit clips (**A**).
Push the Modesty Panel (**B**) into the bottom joint (**D**) of the center conduit clip (**A**)

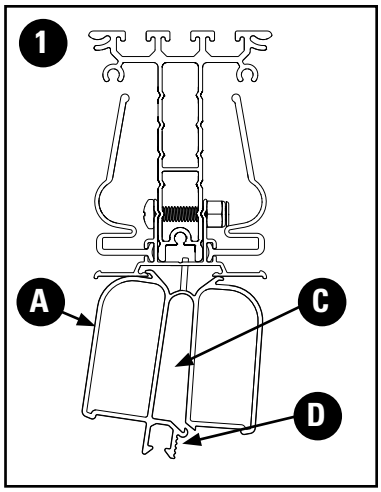

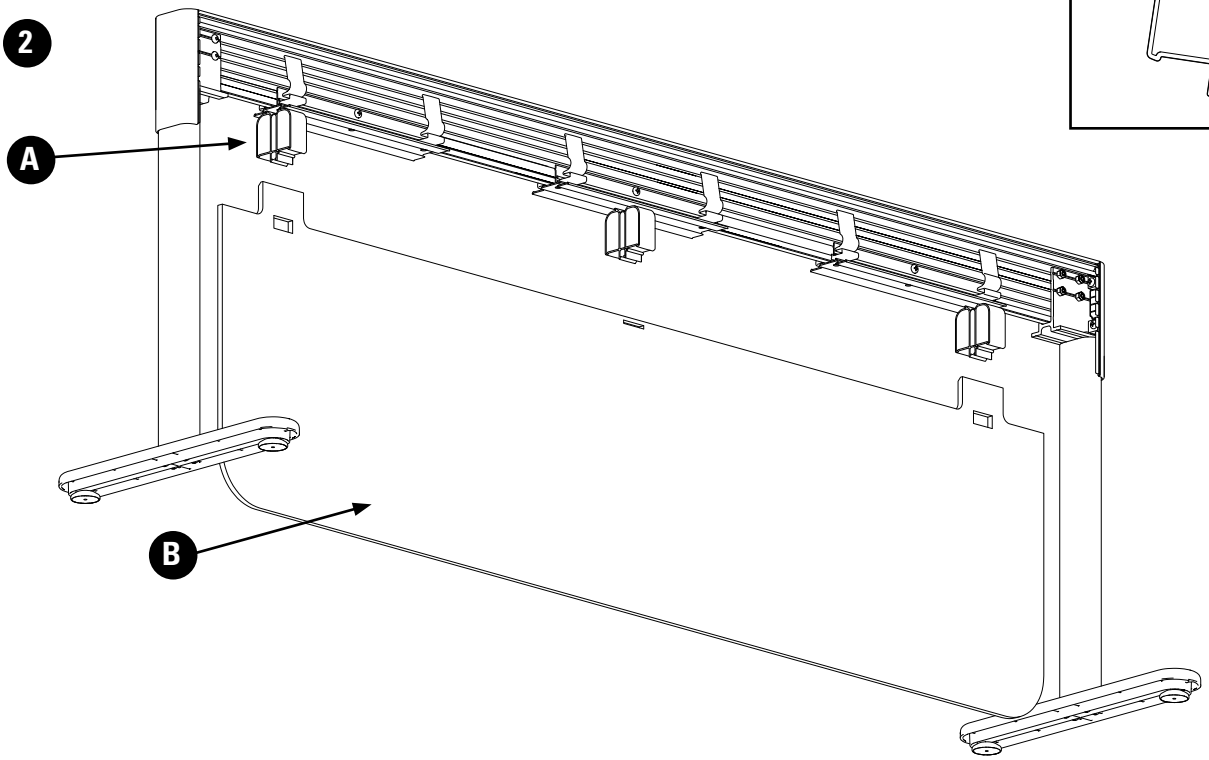

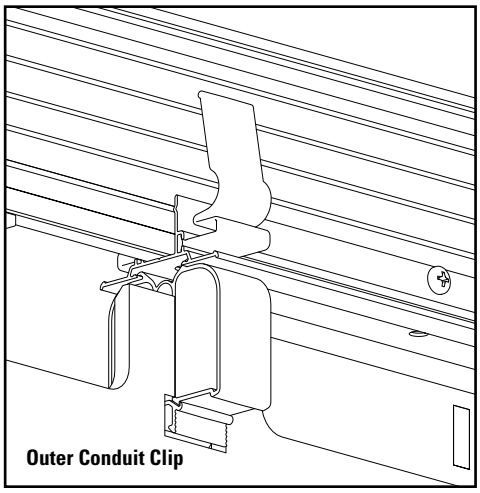
Outer Conduit Clip

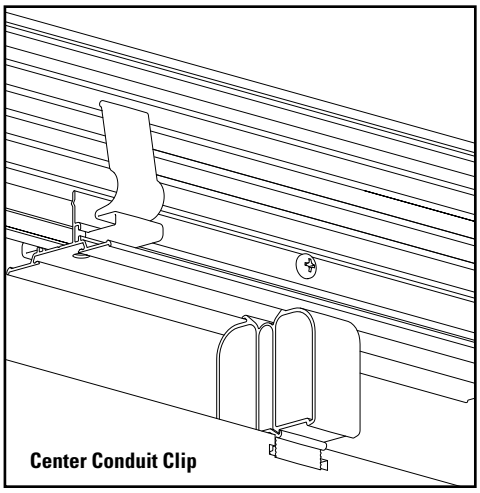
Center Conduit Clip

Glass Beam Mounted Privacy Screen - SOAGPS and PET Felt Beam Mounted Privacy Screen - SOAFPS

Glass Beam Mounted Privacy Screen - SOAGPS

STEP 1: Install fasteners (S7) and the t-nuts (S65) onto the screen clamps (**A**) and (**B**). Install the screen brackets (**A**) and (**B**) to the glass screen (**C**). Ensure plastic spacer (**E**) and insert (**F**) are also installed in between the glass screen (**C**) and the screen bracket (**A**)

STEP 2: Attach the screen (**C**) to the beam with the t-nuts (S65).

Note: Tighten the brackets to the beam first, then to the glass.

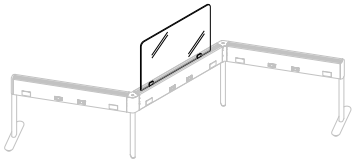

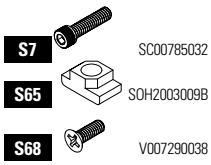

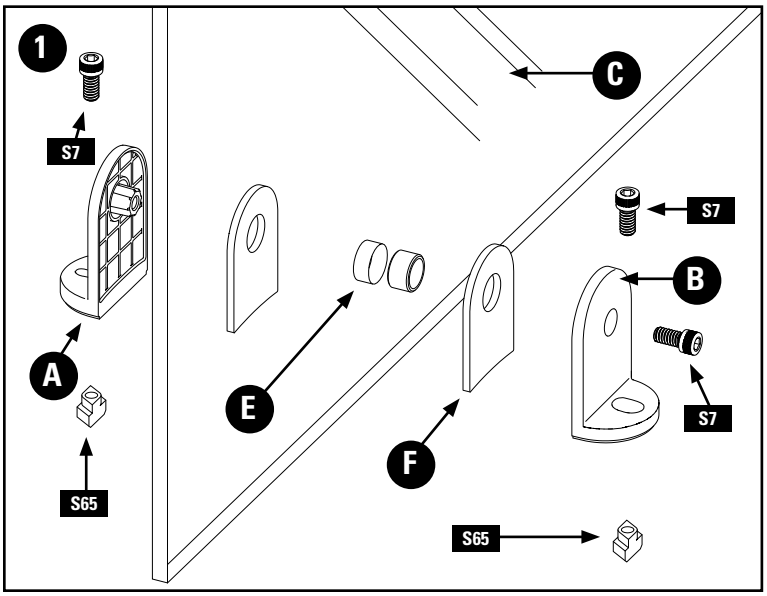

CLAMP FOR GLASS

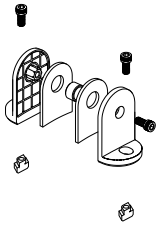

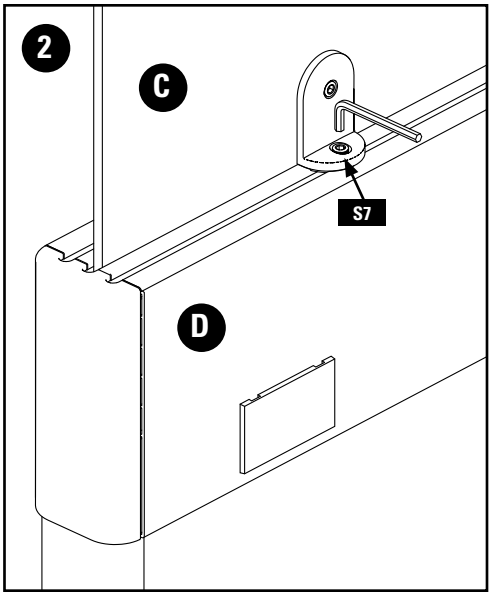

PET Felt Beam Mounted Privacy Screen - SOAFPS

STEP 1: Install fasteners (S7) and the t-nuts (S65) onto the screen clamps (**A**) and (**B**). Install the screen brackets (**A**) and (**B**) to the PET felt screen (**C**).

STEP 2: Attach the PET felt screen (**C**) to the beam with the t-nuts (S65).

Note: Tighten the brackets to the beam first, then to the PET felt.

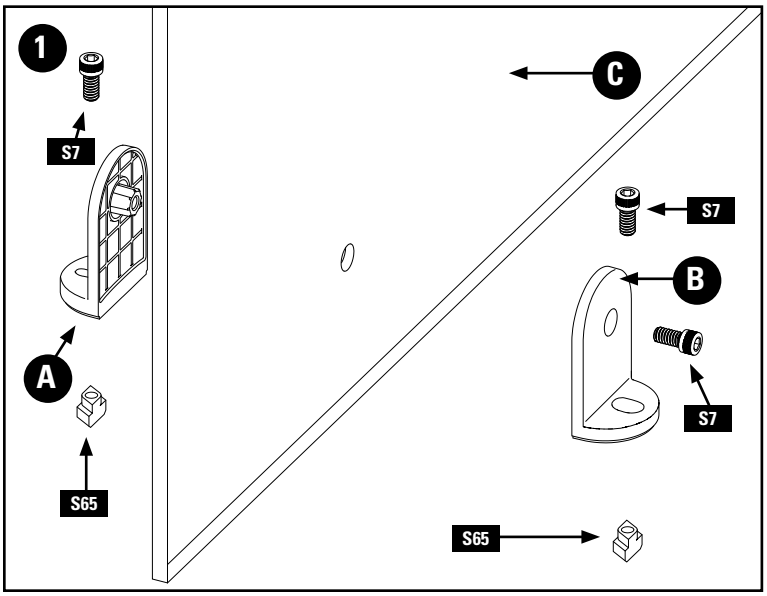

CLAMP FOR PET FELT



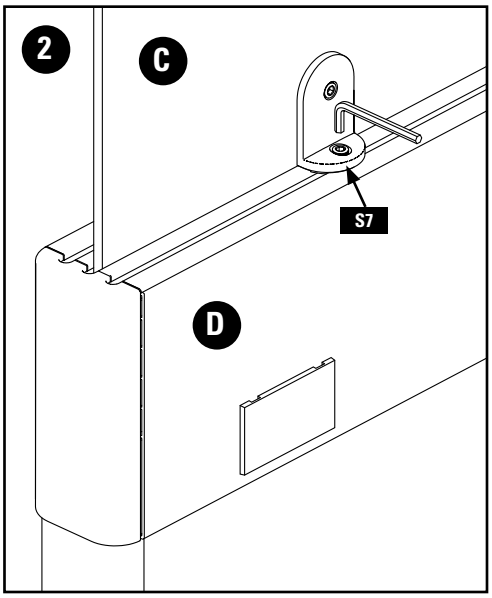

Hanging Whiteboard - SOAHWB, Hanging Tackboard - SOAHTB, Hanging Privacy Screen - SOAHPV, Hanging Pegboard - SOAHPB

STEP 1: Assemble the u-bracket (**A**) with the fastener (S7) and the t-nut (S65). **Do not tighten**. Install the u-bracket into the center rail of the beam (**F**). Drop the screen (**B**) into the u-bracket (**A**).
NOTE: Hanging Privacy Screen - SOAHPV does not require this step, the screen simply hangs from the rigid bracket/straps.

STEP 2: Attach the bump-on stickers (S70) to the rigid bracket (**C**). Line up the rigid bracket (**C**) to the screen (**B**).

STEP 3: Wrap the felt strap (**D**) over the rigid bracket (**C**) and secure it with the fastener (S34) and the end puck (**E**). For aesthetic purposes, ensure that the pucks all face the same direction.

Note: Beam run must be 72" or longer to use upper frame with hanging accessories. May be single or multiple beams totaling 72" or more.

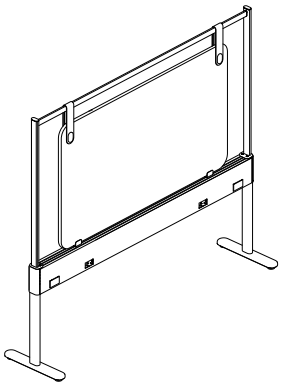

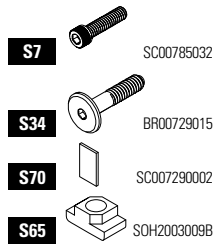

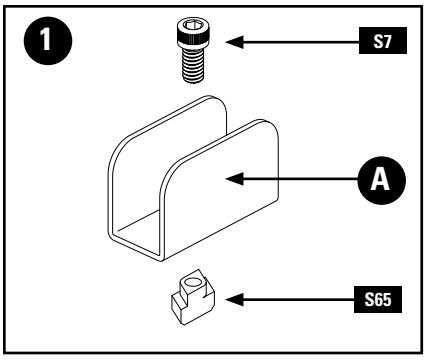

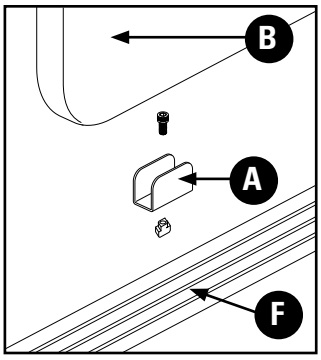

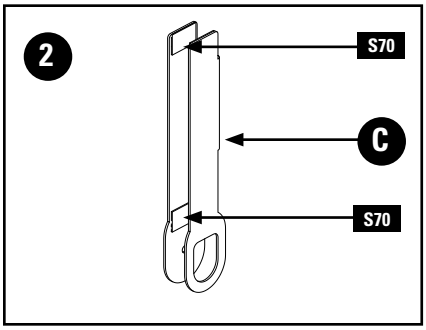

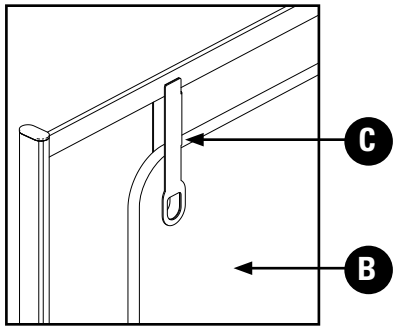

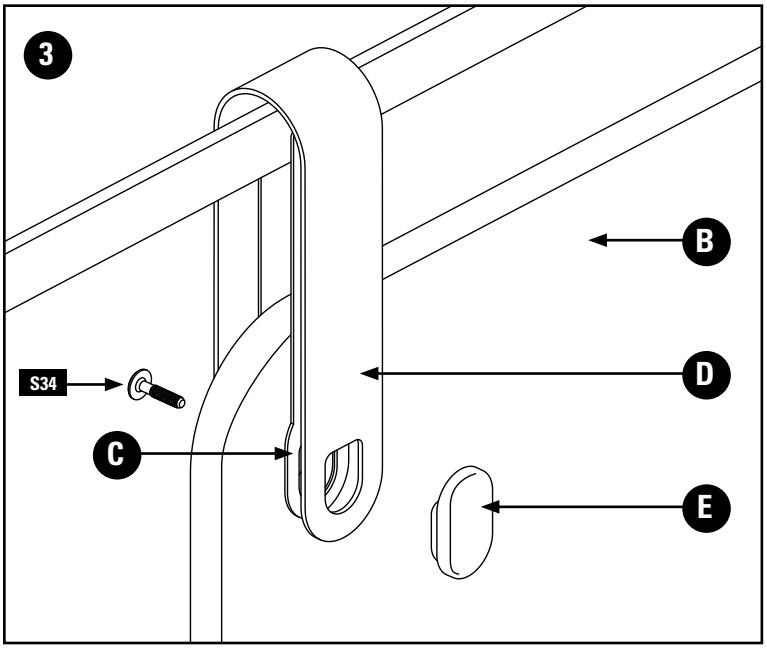

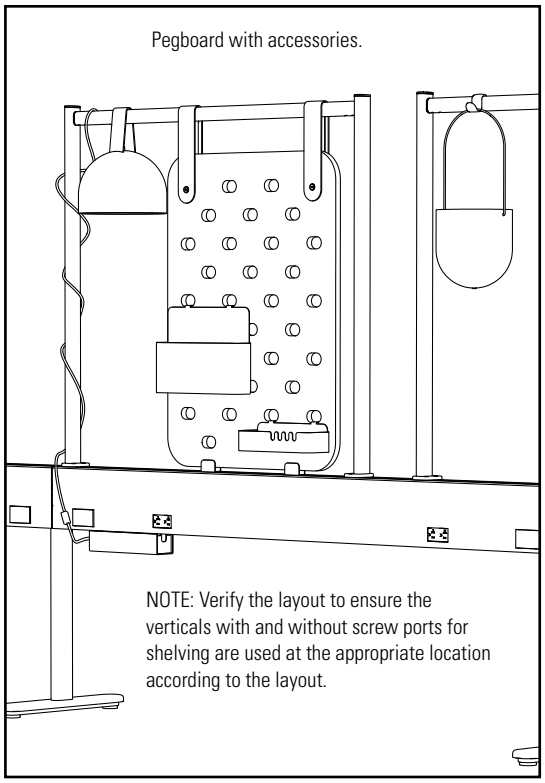

Accessories fit over one piece of PET felt. Gently spread the two pieces of PET felt and slip the bracket over one piece.

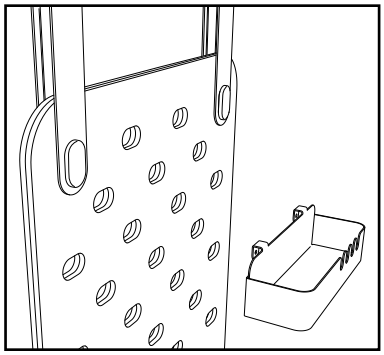

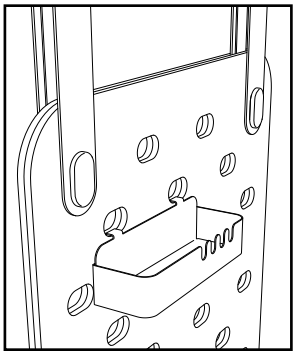

Privacy Panel • SOWAPP, SOWACPL, SOWACPR, SOWARPL, SOWARPR, SOWACWP, SPWACCP

STEP 1. Install the brackets (**B**) into the pre-drilled holes in the worksurface (**A**) as shown in the image below. Use fasteners (S1)

S1 007280011

STEP 2. Install screws (S7) into the pucks (**E**). Do not tighten them. Leave them out as shown in the image below. Push the pucks (**E**) into the holes in the PET felt privacy screen (**F**).

S7 SC00785032

STEP 3. Install the PET felt privacy screen (**F**) as shown in the image below. Slide in the straight section of the screen first, guiding the screws (S7) into the Brackets (**B**) keyholes. Wrap the curved section of the screen around the worksurface radius and guide the screw (S7) into the bracket (**B**). Once in the screen is in place tighten the screws (S7).

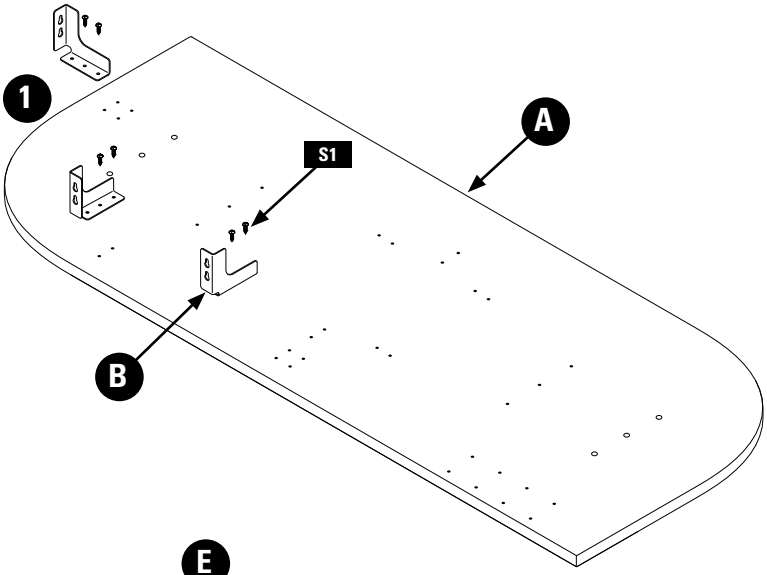

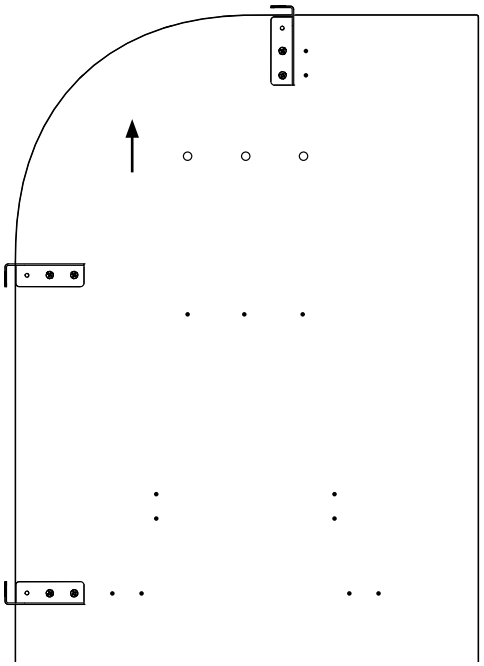

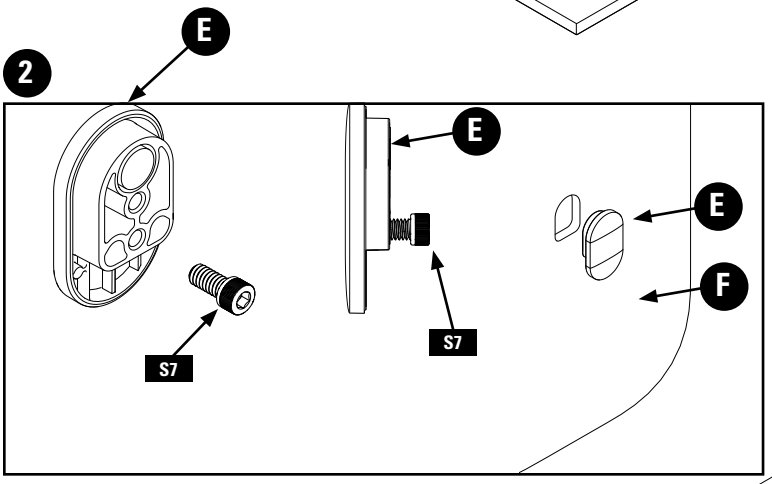

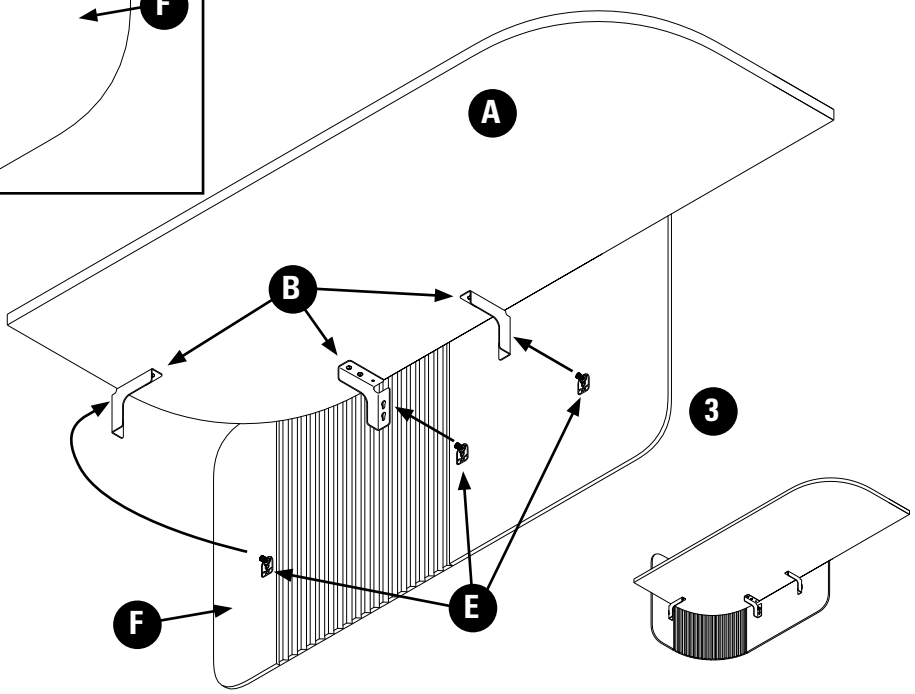

Modesty Panel • SOWABP, SOWARML, SOWARMR

S1 007280011

S7 SC00785032

STEP 1. Determine mounting position: Flush or Inset and align holes In brackets (**B**) with pre-drilled holes in the worksurface.

STEP 2. Install screws (S7) into the pucks (**E**). Do not tighten them. Leave them out as shown in the image below. Push the pucks (**E**) into the holes in the PET felt modesty screen (**F**).

STEP 3. Install the PET felt modesty screen (**F**) as shown in the image below. Slide in the straight section of the screen first, guiding the screws (S7) into the brackets (**B**) keyholes. Wrap the curved section of the screen around the worksurface radius and guide the screw (S7) into the bracket (**B**). Once in the screen is in place tighten the screws (S7).

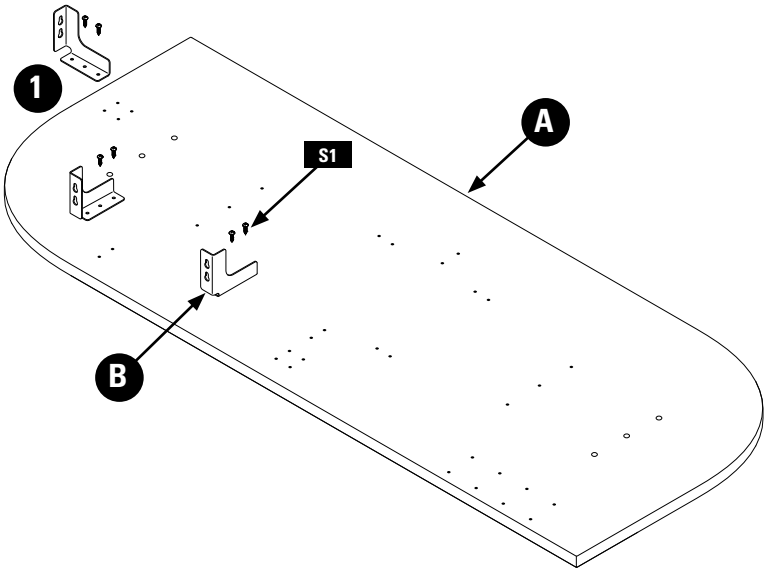

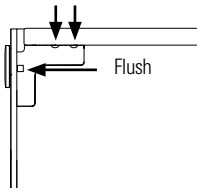

Flush position

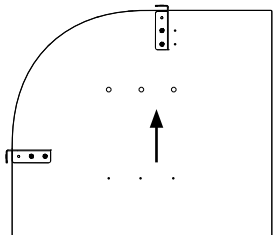

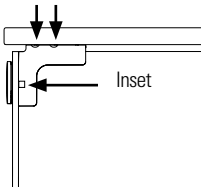

Inset position

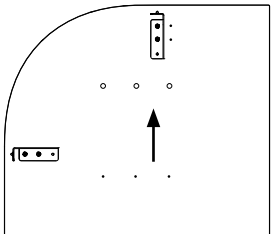

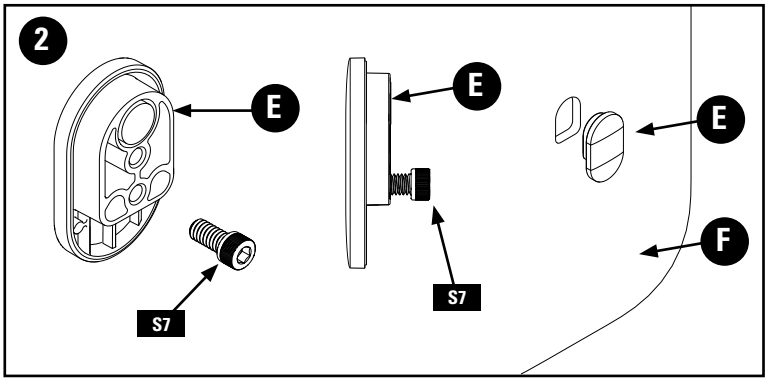

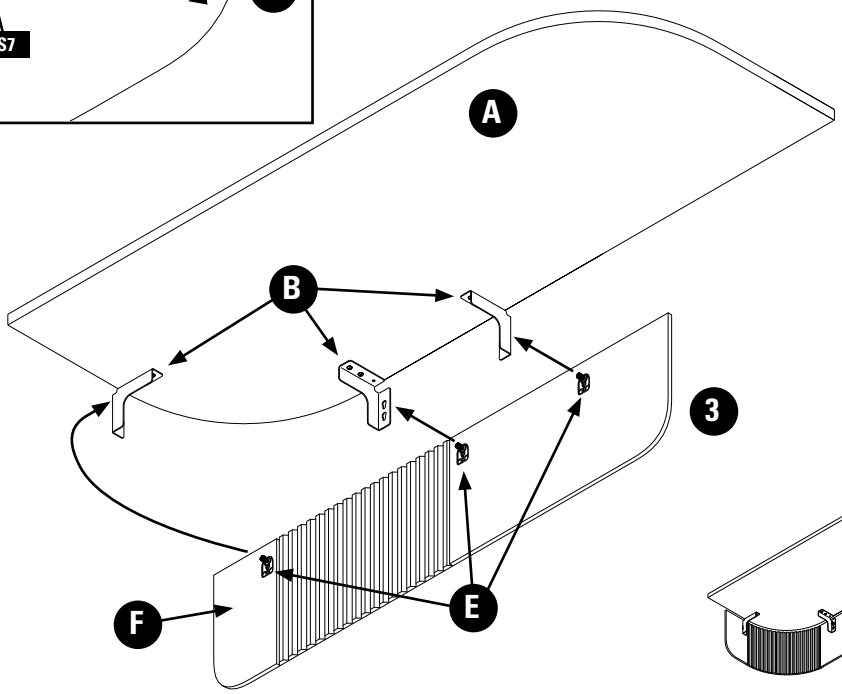

Linear Light - SOAHLL

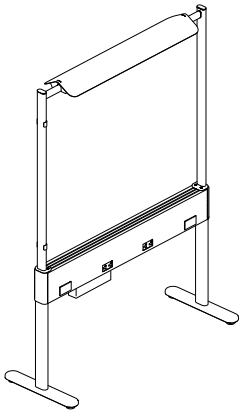

STEP 1: Attach the LED light tubes (**A**) to the light hood (**B**). The lights can be placed in 2 positions: Facing down or facing out.

STEP 2: Run the wires through the light hood (**B**) as shown below. Use stick-on wire manager clips (**F**) to secure wire.

STEP 3: Install rubber trim (**C**) by positioning it across the U feature in the metal. Press the rubber trim (**C**) into the U feature until it is secured.

STEP 4: Use the cable clips (**D**) to make the power cord taunt.

STEP 5: Place the power transformer into the cable basket (**E**). Secure the cable basket (**E**) to the beam.

Note: Horizontal rail to be 42" or wider to mount linear light.

LIGHT TUBE ORIENTATION:

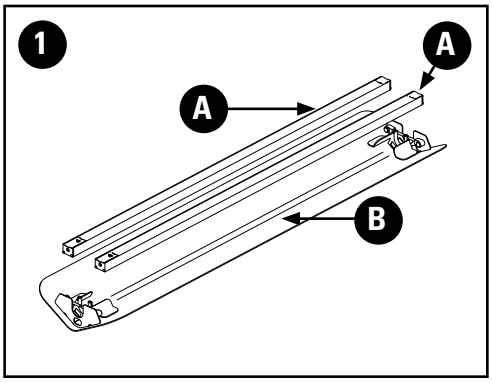

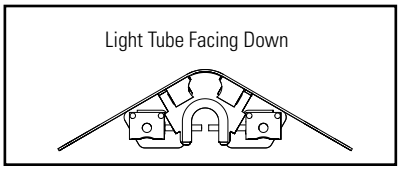

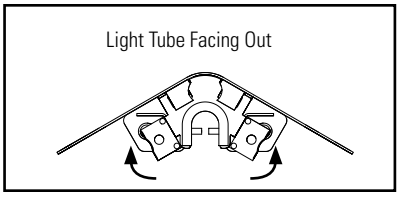

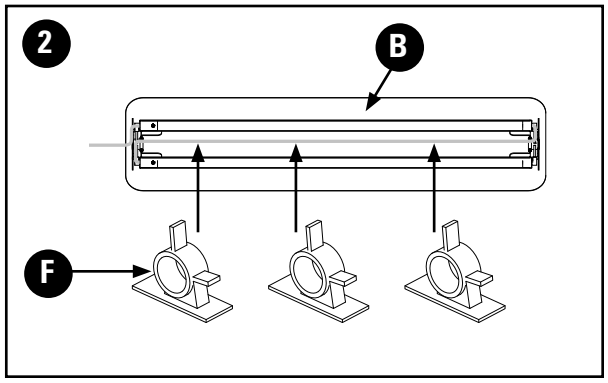

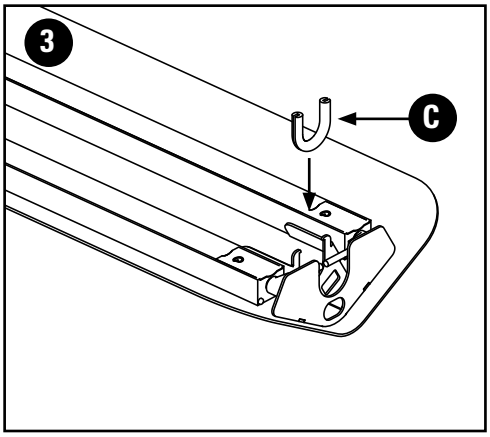

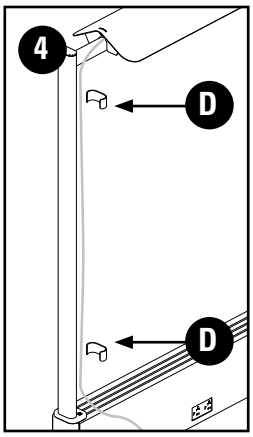

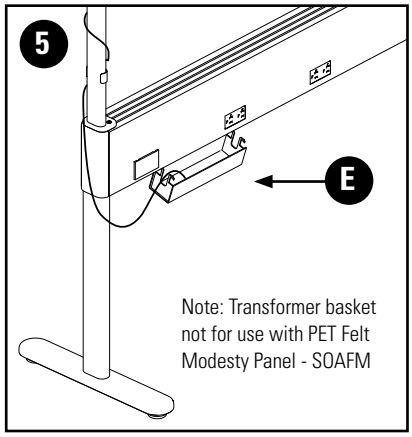

PET Felt Box - SOSSFB

STEP 1: Ensure the v-grooves for the inner PET felt (**A**) faces downwards vs the outer PET felt (**B**) faces upwards.

STEP 2: Fold the inner PET felt (**A**) and outer PET felt (**B**) and place inner PET felt (**A**) into outer PET felt (**B**).

STEP 3: Line up the handle holes and feed the tabs (**C**) into the slots (**D**).

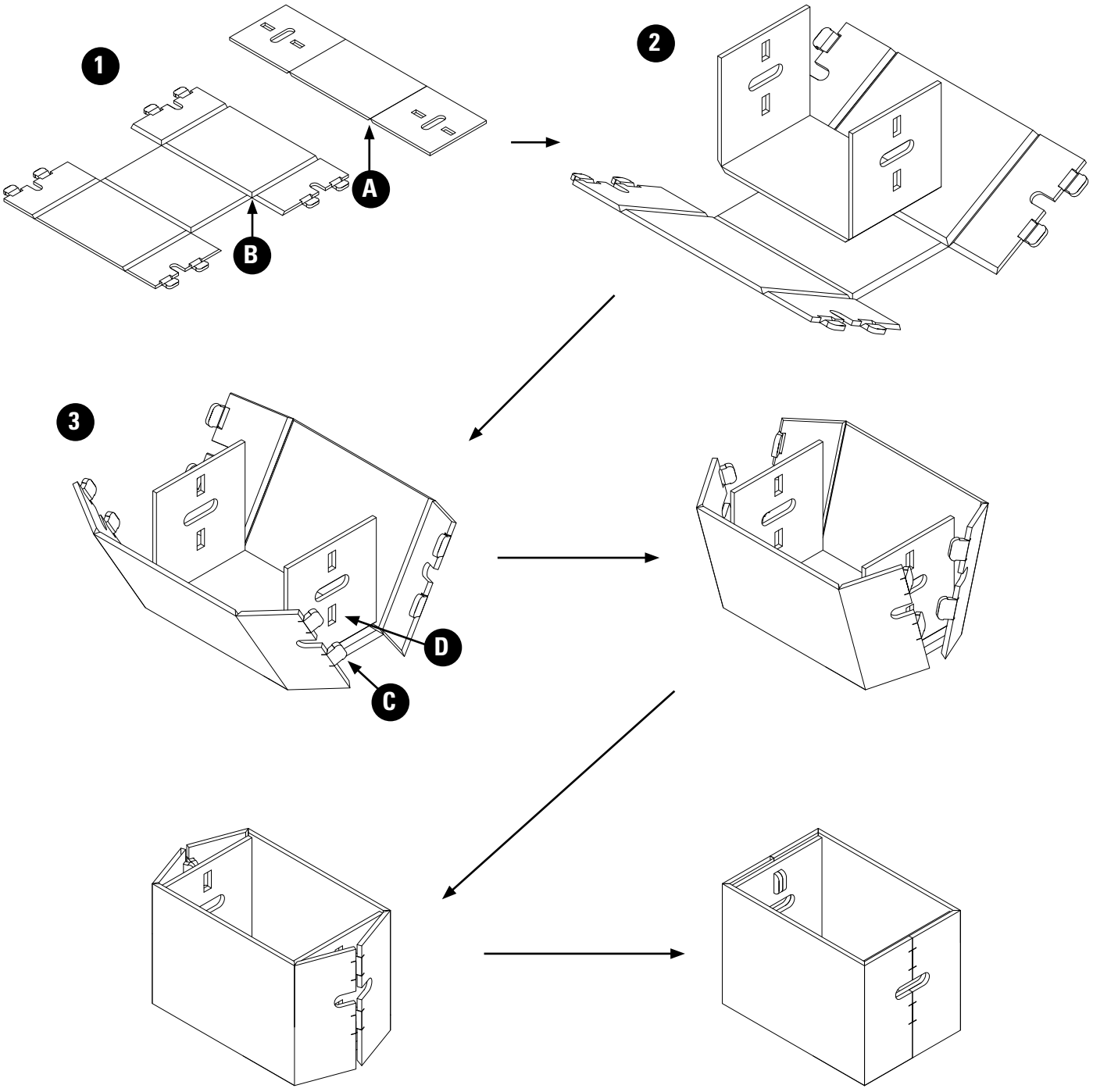

Hanging Planter - SOAHPL

STEP 1: Clip the hook (**B**) to the Upper Horizontal Rail (**A**).

STEP 2: Hang the Hanging Planter (**C**) on the hook (**B**)

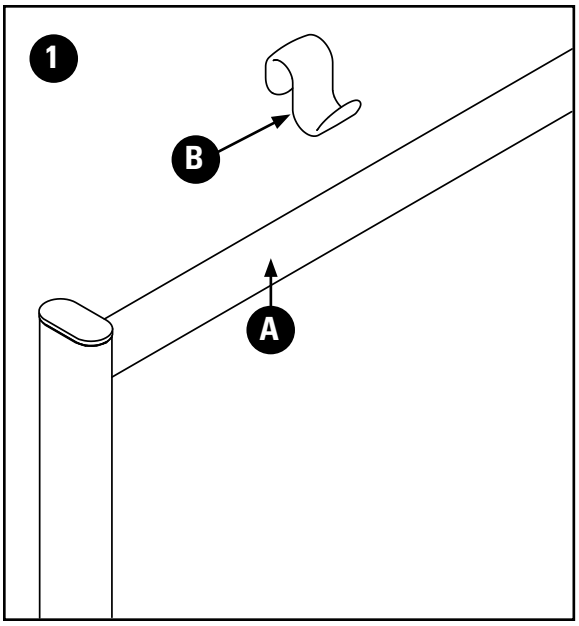

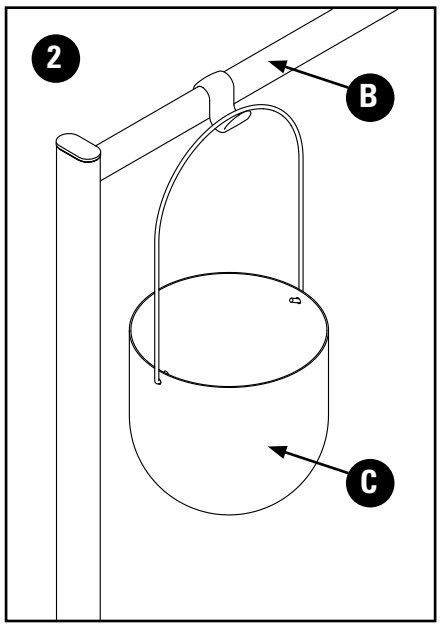

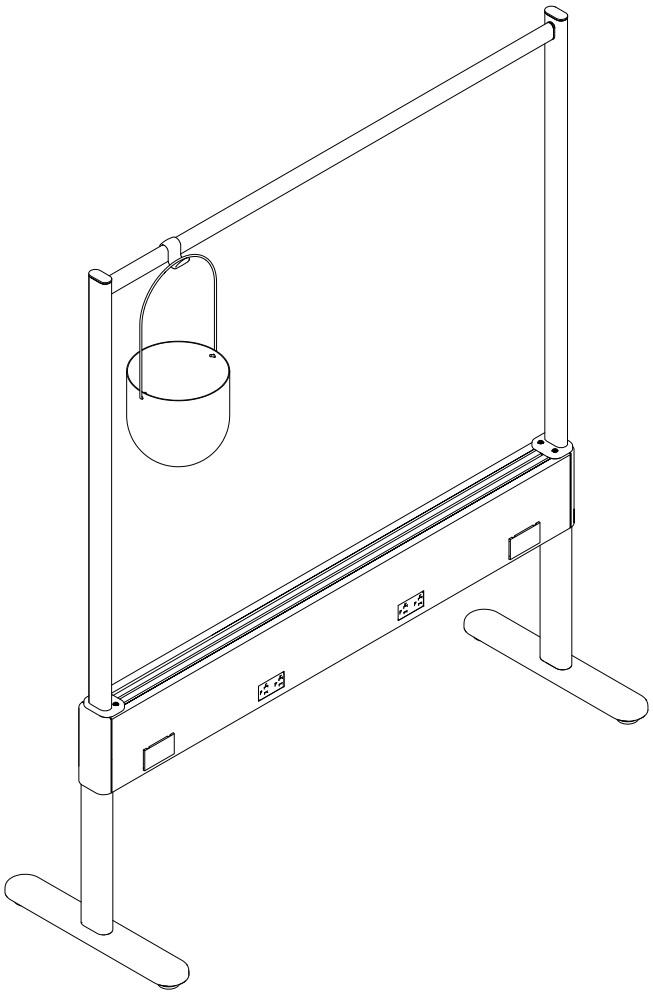

Hanging Pendant Light - SOAHPPL

STEP 1: Thread the light fixture (**A**), and bracket (**B**) into the pendant shade (**C**).

STEP 2: Hang the felt strap (**D**) over the Upper Horizontal Rail, and then tuck the felt strap ends through the shade (**C**). Insert the bracket tabs (**B**) into slot through the felt (**D**).

STEP 3. Hook the basket (**E**) onto the raceway. Then using the excess light fixture cable, coil the cord (**F**) 5x around the post and place the excess cord into the basket (**E**).

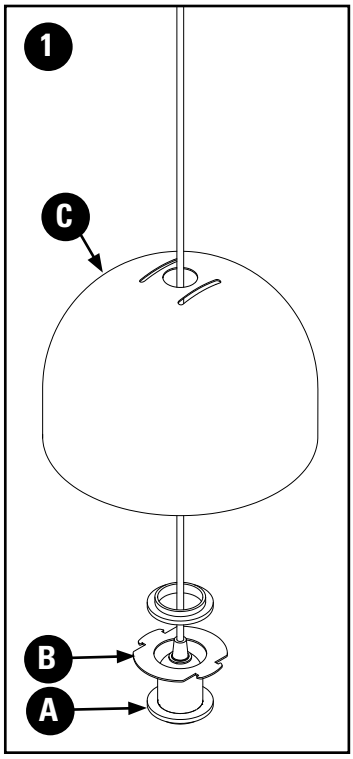

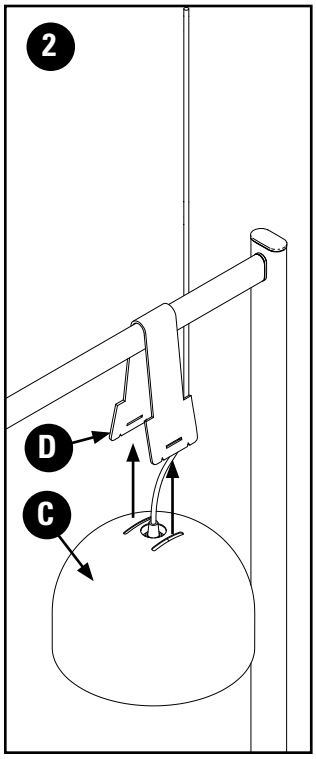

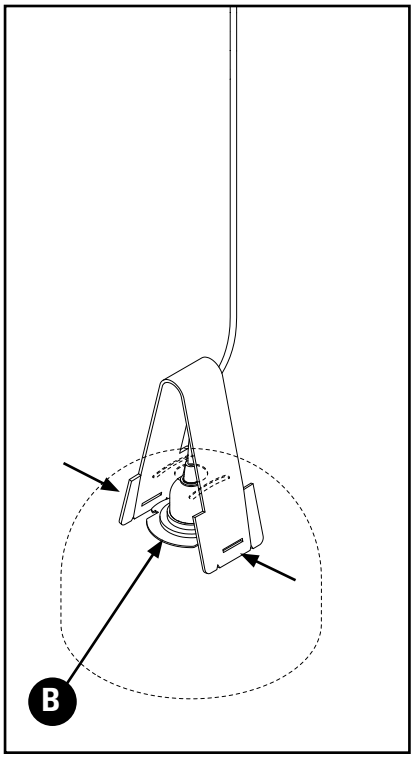

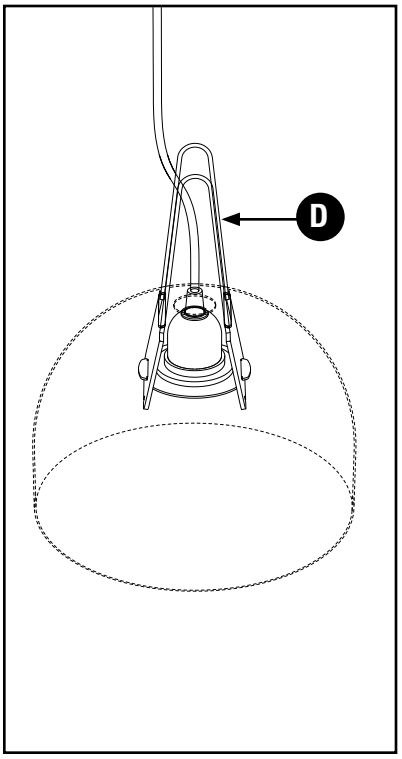

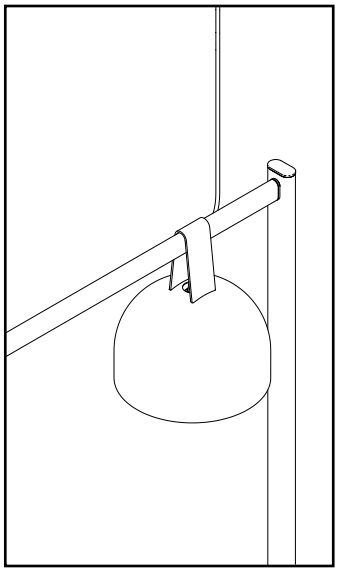

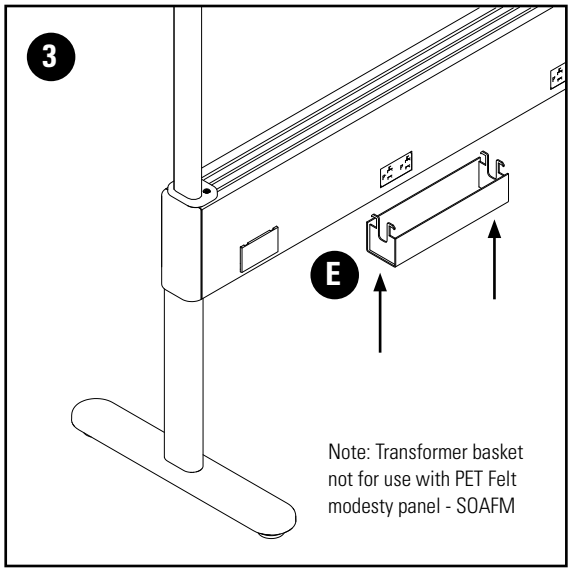

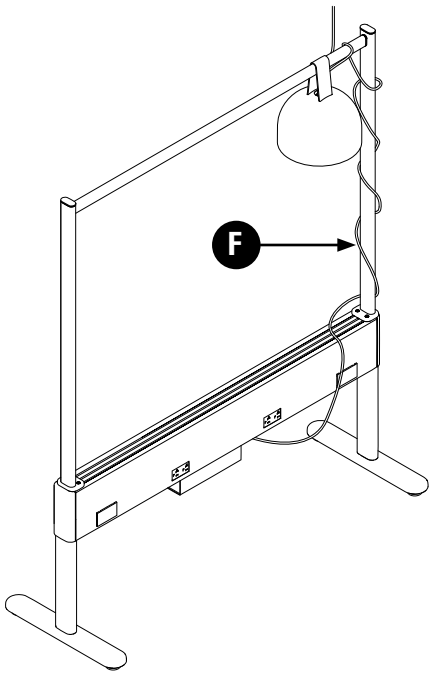

Standard Storage Handle - SOSS

STEP 1: Mount supplied screws (S29) and handle to door (**A**) or drawer.



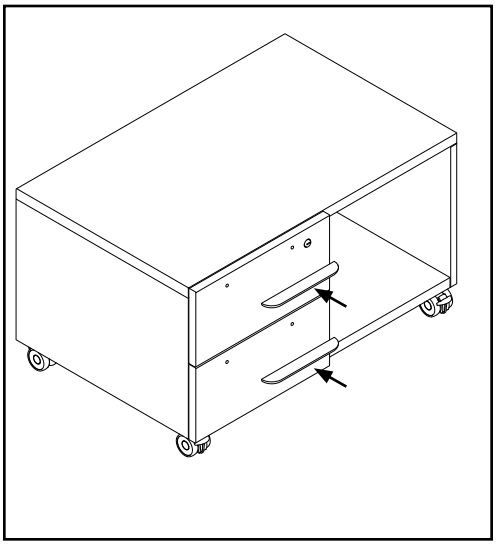

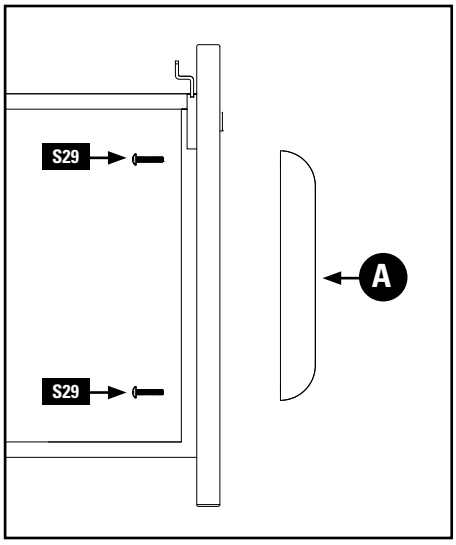

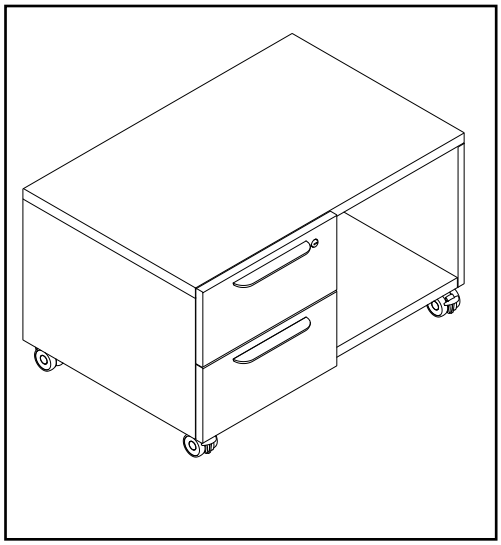

Work Cart Storage Handle - SOSW

STEP 1: Mount supplied screws (S29) and handle to door (**A**).



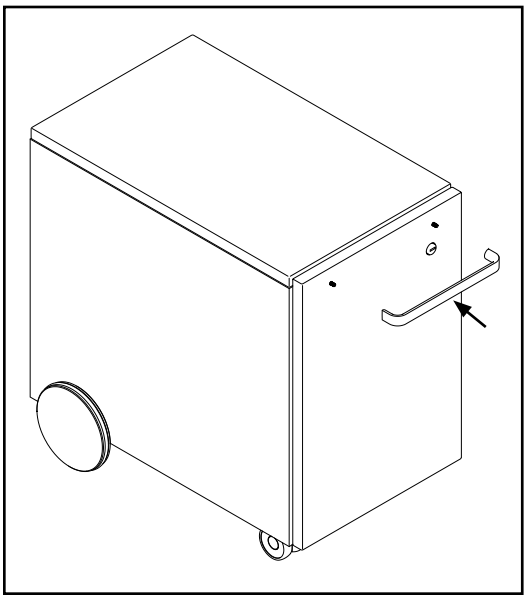

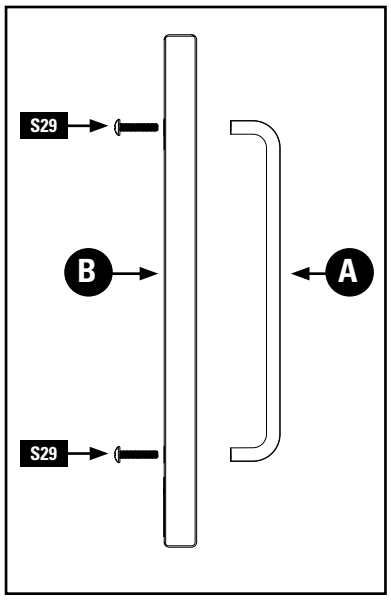

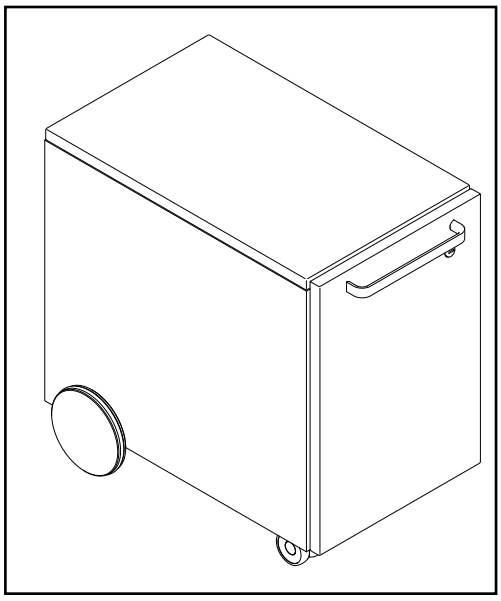

Global US Headquarters
17 West Stow Road, P.O. Box 562
Marlton, New Jersey U.S.A. 08053
T (856) 596-3390
T (800) 220-1900

Showrooms

Atlanta
10 10th Street
Suite 150
Atlanta, GA 30309
T (404) 879-0998

Boston
One Harbor Street
Suite 104
Boston, MA 02210
T (617) 406-5435

Chicago
1045 W Fulton Street
Chicago, IL 60607
T (312) 755-0843

Irvine
18400 Von Karman Ave.
Suite 100
Irvine, CA 92618

Miami
112 NE 41st Street
6th floor
Miami, FL 33137

New York City
386 Park Avenue South
7th floor
New York, NY 10016
T (212) 545-9900

Philadelphia
1735 Market Street
38th Floor
Philadelphia PA, 19103
T (215) 861-0963

New Jersey (Southern)
119 West Greentree Road
Marlton, NJ 08053
T (856) 596-3390

Phoenix
4675 E Cotton Center Blvd.
Suite 165
Phoenix, AZ 85040
T (602) 426-0666
T (602) 426-0777

Washington, DC
1130 Connecticut Ave.
10th Floor, Suite 1000
Washington, DC 20036
T (202) 659-0230
T (202) 659-0236

Distribution Centers

Atlanta Area
6715 Maple Ave.
Suite 100
Buford, GA 30518
T (678) 602-4130

Baltimore Area
Troy Hill
Corporate Center
7030 Troy Hill Drive
Elkridge, MD 21075
T (410) 379-8021

Chicago Area
27W501 North Ave.
Suite 300
West Chicago, IL 60185
T (630) 681-2818

Cincinnati Area
8712 LeSaint Drive
Fairfield, OH 45014
T (513) 777-0009

Dallas Area
2025 West Beltline Road
#100
Carrollton, TX 75006
T (972) 236-1366

Denver Area
19080 E. 38th Ave.
Unit # 30
Aurora, CO 80011
T (303) 340-1617

Ft. Lauderdale Area
560 Sawgrass
Corporate Pkwy
Sunrise, FL 33325
T (954) 846-8888

Houston Area
7865 Northcourt Road
Suite 200
Houston, TX 77040
T (713) 695-5777

Kansas City Area
11617 West 81st Street
Lenexa, KS 66214
T (913) 310-9963

Los Angeles Area
3629 Workman Mill Road
Whittier, CA 90601
T (562) 484-9686

Philadelphia Area
181 Walter A Gaines Way
Suite 200
Lawnside, NJ 08045
T (856) 596-3390

Seattle Area
Oakesdale Commerce Ctr.
820 Southwest 34th St.
Building W7, Suite A
Renton, WA 98057
T (425) 291-9282

Tampa Area
10351 Windhorst Road
Tampa, FL 33619
T (813) 621-6272